# Automatic Transfer Switch Equipment

Reliable made affordable

Himel

# About Himel

Himel is a multinational manufacturer and provider of electrical products successfully combining global expertise with local knowledge.

Founded by a Spanish entrepreneur in 1958, the company pioneered in exporting quality electrical enclosures, establishing Himel brand globally. Today, our global footprint and technology enable us to provide the best combination of affordable and reliable offers for Low Voltage Power distribution, Industry Automation and Home Electric to our long-term customers and partners in over 50 countries where we are present.

**Himel. Reliable made affordable**

# HDQ3HB Automatic Transfer Switch

GB14048.11 / IEC60947-6-1

## Range Presentation

HDQ3HB is Himel 3 series range of CB type Automatic Transfer Switch, automatic transder the power supply between the normal power & standby power.

Standby power supply can be net power or generator.

Integrated with HDM3 series MCCB to provide over current protection, integrated or split type controllor available.

Application standard: GB14048.11/ IEC60947-6-1

## Features

- 5 frame sizes: 63, 100, 250, 400, 630AF
- Rated current In (A): 16 - 630A
- Rated voltage AC Ue (V): 400/415, Poles: 3 & 4
- Integrated or split intelligent controllor
- HDM3 integrated with overload , short circuit protection

## Ordering Code

| Product | Frame Size | Breaker Capacity | Rated current | Pole | Controller |
|---|---|---|---|---|---|
| **HDQ3HB** | **63** | **S** | **10** | **3** | **Z** |
| HDQ3HB | **63:** 63AF<br>**100:** 100AF | **S:** 25kA | **10:** 10A<br>.....<br>**100:** 100A | **3:** 3P<br>**4:** 4P | **Default:** Split<br>**Z:** integrated |
| | **250:** 250AF<br>**400:** 400AF<br>**630:** 630AF | **F:** 50kA | **250:** 250A<br>.....<br>**630:** 630A | | |

## Order Information

| Current shell frame | Conventional thermal current | Breaking capacity | CDQ3HB | |
|---|---|---|---|---|
| | | | 3 poles | 4 Ordering code |
| | | | Ordering code | Ordering code |
| 63AF | 10 | S | HDQ3HB63S103Z | HDQ3HB63S104Z |
| | ... | | ... | ... |
| | 63 | | HDQ3HB63S633Z | HDQ3HB63S634Z |
| 100AF | 16 | S | HDQ3HB100S163Z | HDQ3HB100S164Z |
| | ... | | ... | ... |
| | 100 | | HDQ3HB100S1003Z | HDQ3HB100S1004Z |
| 250AF | 100 | F | HDQ3HB250F1003Z | HDQ3HB250F1004Z |
| | ... | | ... | ... |
| | 225 | | HDQ3HB250F2253Z | HDQ3HB250F2254Z |
| | 250 | | HDQ3HB250F2503Z | HDQ3HB250F2504Z |
| 400AF | 200 | F | HDQ3HB400F2003Z | HDQ3HB400F2004Z |
| | ... | | ... | ... |
| | 400 | | HDQ3HB400F4003Z | HDQ3HB400F4004Z |
| 630AF | 400 | F | HDQ3HB630F4003Z | HDQ3HB630F4004Z |
| | ... | | ... | ... |
| | 630 | | HDQ3HB630F6303Z | HDQ3HB630F6304Z |





HDQ3HB Automatic Transfer Switch

GB14048.11 / IEC60947-6-1

| Technical Parameters | | | | | |
|---|---|---|---|---|---|
| **Model & Spec** | **HDQ3HB-63** | **HDQ3HB-100** | **HDQ3HB-250** | **HDQ3HB-400** | **CDQ3HB-630** |
| Executive circuit breaker | HDM3-63 | HDM3-100 | HDM3-250 | HDM3-400 | HDM3-630 |
| Number of poles | 3、4 | | | | |
| Available standard | GB14048.11 / IEC60947-6-1 | | | | |
| Electrical level | CB-level | | | | |
| Use category | GB14048.11 AC-33iB / IEC60947-6-1 AC-32B | | | | |
| **Electrical performance** | **HDQ3HB-63** | **HDQ3HB-100** | **HDQ3HB-250** | **HDQ3HB-400** | **HDQ3HB-630** |
| Rated insulation voltage Ui (V) | 690 | 800 | | | |
| Rated impulse withstand voltage Uimp (kV) | 6 | 8 | | | |
| Rated operating voltage Ue (V) | 400 | | | | |
| Conventional thermal current Ie (A) | 10/16/20/25/32/40/50/63 | 16/20/25/32/40/50/63/80/100 | 100/125/140/160/180/200/225/250 | 200/225/250/315/350/400 | 400/500/630 |
| Rated working frequency (Hz) | 50 | | | | |
| Breaking capacity level | S | S | F | F | F |
| Rated short circuit breaking capacity Icn (kA) | 25 | 25 | 50 | 50 | 50 |
| Rated short circuit making capacity Icm (kA) | 52.5 | 52.5 | 105 | 105 | 105 |
| Mechanical life (cycles) | 10000 | 10000 | 5000 | 5000 | 5000 |
| Electrical life (cycles) | 1500 | | 1000 | | |
| Conversion time | ≤3s | | | | |
| EMC level | Environment B | | | | |
| Sampling mode | Normal and standby three-phase sampling | | | | |
| **Control function** | | | | | |
| Power grid (P) – Power grid (P) | ■ | | | | |
| Power grid (P) – Generator (G) | ■ | | | | |
| Auto operation mode – Auto power-on and auto reset | ■ | | | | |
| Auto operation mode – Auto power-on but not auto reset | ■ | | | | |
| Auto operation mode – Mutual backup | ■ | | | | |
| Electric operation vis button | ■ | | | | |
| Manual operation vis handle | ■ | | | | |
| Remote transfer | ■ | | | | |
| Normal and standby power state output | ■[2)] | | | | |
| Normal and standby power-on state output | ■ | | | | |
| Normal and standby trip state output | ■ | | | | |
| Fire dual-divided | ■(Alarm lamps flash simultaneously) | | | | |
| Generator startup | ■ | | | | |

# HDQ3HB Automatic Transfer Switch

GB14048.11 / IEC60947-6-1

| Technical Parameters | | | | | |
|---|---|---|---|---|---|
| **Controller** | **HDQ3HB-63** | | **HDQ3HB-250** | **HDQ3HB-400** | **CDQ3HB-630** |
| Overload protection | ■ | | | | |
| Instantaneous protection | ■ | | | | |
| Over-voltage protection | ■(Factory set: 264V) | | | | |
| Under-voltage protection | ■(Factory set: 184V) | | | | |
| No-voltage protection | ■ | | | | |
| Lost phase protection | ■ | | | | |
| Motor load phase sequence identification protection | ■[1] | | | | |
| Special lost phase protection for motor load | ■[1] | | | | |
| Switch fusion welding protection | ■(ERROR02) | | | | |
| Switch movement protection | ■(ERROR02) | | | | |
| Power failure alarm | ■(Power indicator at the failure side flashes) | | | | |
| Trip failure alarm | ■(Trip indicator at the failure side flashes) | | | | |
| Trip failure button electrically reclosed | ■ | | | | |
| **Setting functions** | | | | | |
| Over-voltage valve value adjustable | ■ 253V~276V | | | | |
| Under-voltage valve value adjustable | ■ 253V~276V | | | | |
| Conversion delay T1 time adjustable | ■ 0~99.9s (Factory setting: 3s) | | | | |
| Return delay T2 time adjustable | ■ 0~99.9s (Factory setting: 3s) | | | | |
| Generator starting delay T3 time adjustable4) | ■ 0~99.9s (Factory setting: 15s) | | | | |
| Generator stop delay T4 time adjustable | ■ 0~99.9s (Factory setting: 15s) | | | | |
| **Dimensions (mm)** | **HDQ3HB-63** | **HDQ3HB-100** | **HDQ3HB-250** | **HDQ3HB-400** | **HDQ3HB-630** |
| **Breaking capacity level** | S | S | F | F | F |
| Integral 3P dimensions (W x H x D) | 375x220x121 | 415x220x148 | 465x220x148 | 610x330x185 | 610x402x185 (Expansion row) |
| Integral 4P dimensions (W x H x D) | | | | | |
| Split 3P dimensions (W x H x D) | 335x220x121 | 375x220x148 | 425x220x148 | 575x330x185 | 575x402x185 (Expansion row) |
| Split 4P dimensions (W x H x D) | | | | | |
| Split controller dimensions (W x H x D) | 85x166x92 | | | | |
| Split lead wire length | Standard length: 1.6m (customized wire length: 2m, 2.5m, 3m, 3.5m, 4m, 4.5m, 5m) | | | | |
| Integral 3P installation hole sizes (W x H) | 322x220 | 365x200 | 420x200 | 510x300 | |
| Integral 4P installation hole sizes (W x H) | | | | | |
| Split 3P installation hole sizes (W x H) | 282x200 | 325x200 | 380x200 | 478x300 | |
| Split 4P installation hole sizes (W x H) | | | | | |
| Split controller installation hole sizes (W x H) | 81x162 | | | | |
| Product phase spacing | 25 | 30 | 35 | 48 | |
| Phase spacing after expansion | - | - | - | - | 68 |

- No this option
■ Standard
☐ Optional

[1] OFF by default, with ON set by the controller menu
[2] External power connected by customer
[3] Only 3P product is provided
[4] This delay function will be automatically off when the common terminal is completely turned off.



LOW VOLTAGE DISTRIBUTION

HDQ3HB Automatic Transfer Switch

GB14048.11 / IEC60947-6-1

## Product Features

### Convenient

Installed without sampling wires

With sampling wires built in for convenient installation

### Reliable

With patented mechanism, the mechanical life increases to 15,000 cycles

Dual-rail patented interlock mechanism and auxiliary ON-OFF mechanism are configured to provide reliable operation.

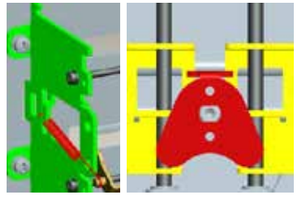

### Safety

Small body and large function

With full steel frame structure and accurate locating features, an insulation cover and three-protection paining layers are provided outside the line board for guaranteeing multiple protections for safety.

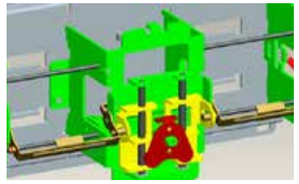

### Excellent

Powerful function and more selection

A type standard configuration provides auto-switch and self-reset for economical operation
B type standard configuration provides auto-switch and self-reset, auto-switch and not-self-reset and fire dual-division functions and powerful function

# HDQ3HB Automatic Transfer Switch

GB14048.11 / IEC60947-6-1

## Product Diagram

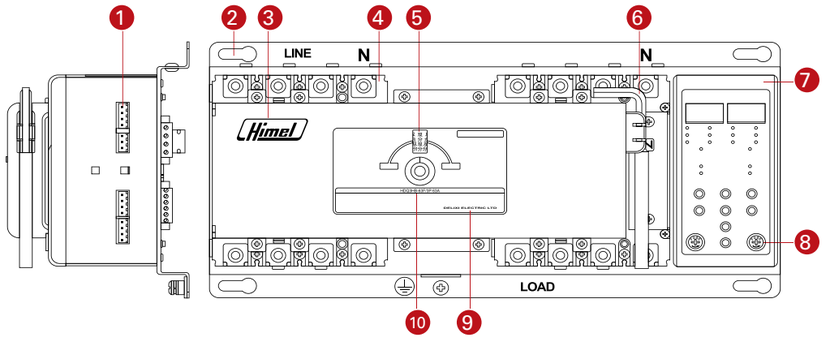


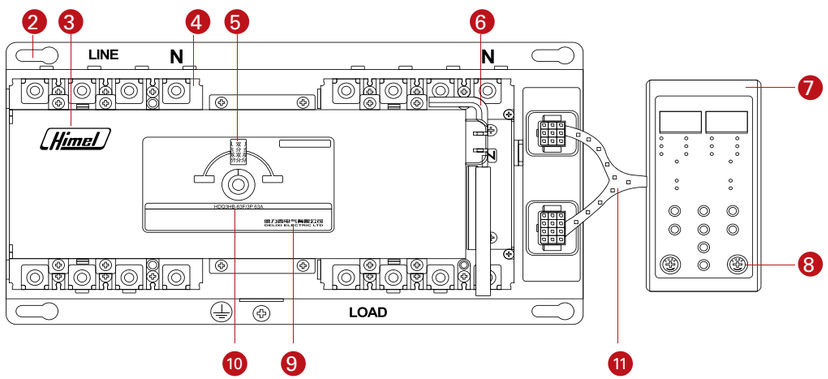


## Product Nameplate

HDQ3HB _____ Automatic transfer switching equipment

Rated voltage:400V
Rated current: _____
rated frequency:50Hz
Class:CB class
Use category:AC-32B

Rated short-circuit making capacity: _____
Rated short-circuit breaking capacity: _____
Rated impulse withstand voltage:6kA _____
Number of poles: _____
Production date _____

Standard：IEC60947-6-1

| | | | | | |
|---|---|---|---|---|---|
| 1 | Wiring termina | 6 | Operating handle | 11 | Split controller connecting cable |
| 2 | Mounting hole | 7 | Controller | 12 | Nameplate parameters |
| 3 | Company logo | 8 | Fuse tube | | |
| 4 | Power terminal | 9 | Company name | | |
| 5 | Transfer position indication window | 10 | Product mode | | |





# HDQ3HB Automatic Transfer Switch

GB14048.11 / IEC60947-6-1

## Installation of HDQ3HB

Split controller

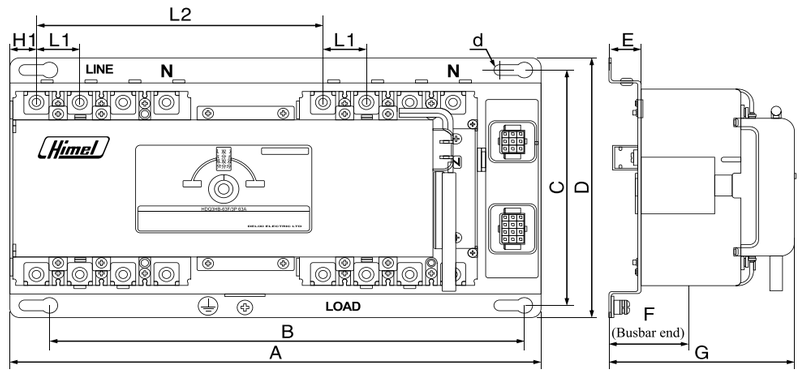


Figure1:Split HDQ3HB-630~400/ 3P and 4P

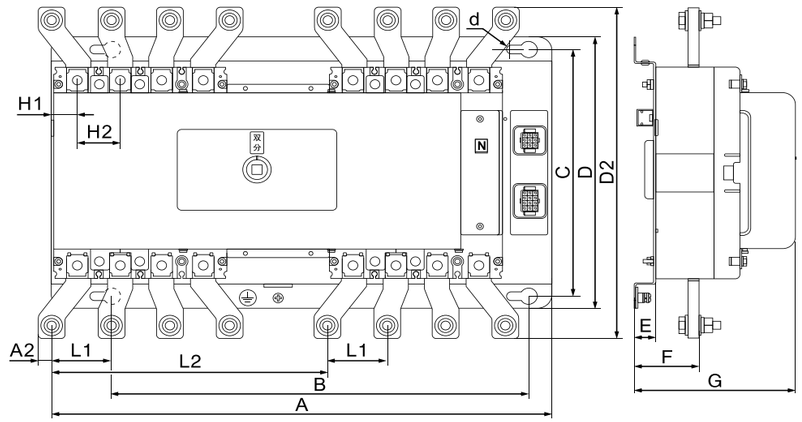


Figure2:Split HDQ3HB-630/ 3P and 4P

| Spec. \ Size | A | A2 | B | C | D | D2 | E | F | G | L1 | L2 | H1 | H2 | d |
|---|---|---|---|---|---|---|---|---|---|---|---|---|---|---|
| CDQ3HB-63S | 335 | - | 282 | 200 | 220 | - | 25 | 49 | 121 | 25 | 180 | 15.5 | - | 9 |
| CDQ3HB-100S | 335 | - | 282 | 200 | 220 | - | 25 | 49 | 121 | 25 | 180 | 15.5 | - | 9 |
| CDQ3HB-250F | 425 | - | 380 | 200 | 220 | - | 25 | 48 | 148 | 35 | 230 | 21.5 | - | 9 |
| CDQ3HB-400F | 575 | - | 478 | 300 | 330 | - | 25 | 62 | 185 | 48 | 316 | 30.5 | - | 10 |
| CDQ3HB-630F | 575 | 14.5 | 478 | 300 | 330 | 402 | 25 | 77 | 185 | 68 | 316 | 30.5 | 48 | 10 |

# HDQ3HB Automatic Transfer Switch

GB14048.11 / IEC60947-6-1

## Installation of HDQ3HB

Integrated controller

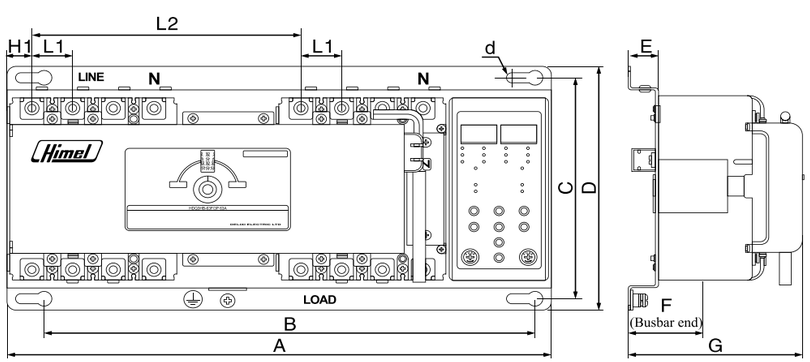


Figure3:Integrated HDQ3HB-630~400/ 3P and 4P

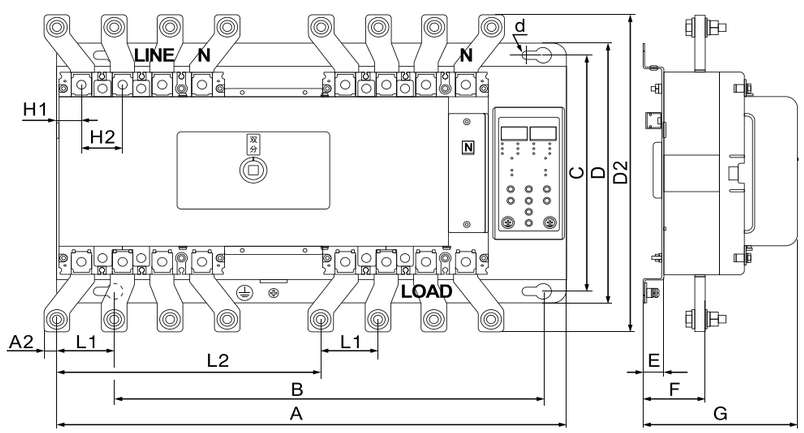


Figure4:Integrated HDQ3HB-630/ 3P and 4P

| Mode / Spec. | A | A2 | B | C | D | D2 | E | F | G | L1 | L2 | H1 | H2 | d |
|---|---|---|---|---|---|---|---|---|---|---|---|---|---|---|
| CDQ3HB-63S | 375 | - | 322 | 200 | 220 | - | 25 | 49 | 121 | 25 | 180 | 15.5 | - | 9 |
| CDQ3HB-100S | 375 | - | 322 | 200 | 220 | - | 25 | 49 | 121 | 25 | 180 | 15.5 | - | 9 |
| CDQ3HB-250F | 465 | - | 420 | 200 | 220 | - | 25 | 48 | 148 | 35 | 230 | 21.5 | - | 9 |
| CDQ3HB-400F | 610 | - | 510 | 300 | 330 | - | 25 | 62 | 185 | 48 | 316 | 30.5 | - | 10 |
| CDQ3HB-630F | 610 | 14.5 | 510 | 300 | 330 | 402 | 25 | 77 | 185 | 68 | 316 | 30.5 | 48 | 10 |





# HDQ3HB Automatic Transfer Switch

GB14048.11 / IEC60947-6-1

## Safety Clearance

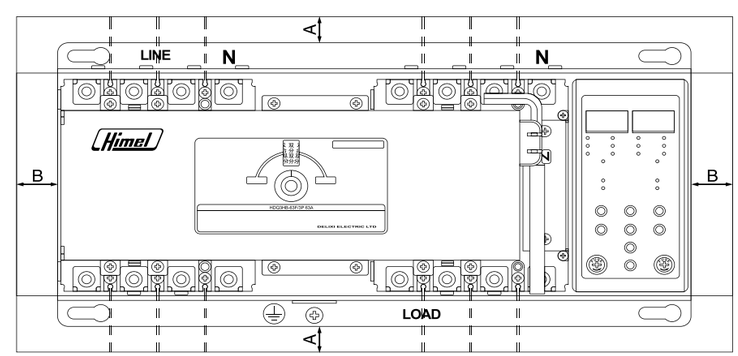


A:installation dimension to the upper and lower housings
B:installation dimension to the housing of the non-conductive part

| | CDQ3HB-63S | CDQ3HB-100S | CDQ3HB-250F | CDQ3HB-400F | CDQ3HB-630F |
|---|---|---|---|---|---|
| A | 25 | 25 | 45 | 85 | 85 |
| B | 40 | 40 | 40 | 80 | 80 |

## Manual Operation Handle

When the automatic transfer switching equipment is installed and commissioned,insert the handle into the handle housing in the arrow direction shown in the figure.

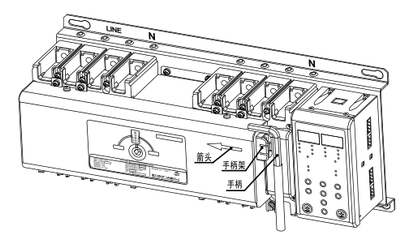

## Controller Cut Out Dimension for Front Door

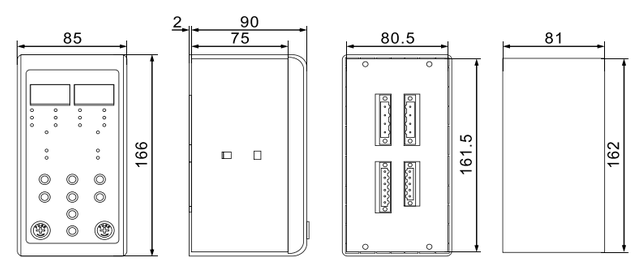


Figure6:Controller dimensions and cutout

# HDQ3HB Automatic Transfer Switch

GB14048.11 / IEC60947-6-1

## Products Connection

Main circuit diagram

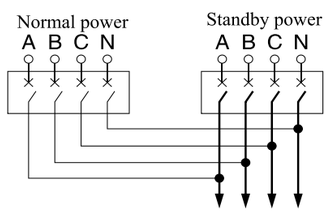


4P wiring diagram

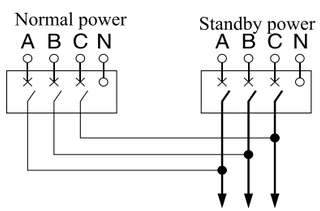


3P wiring diagram

## ATS Status Indicator

103 standby power ON

102 standby MCCB trip

203 normal power ON

202 normal MCCB trip

If need to be lighted the LED , Access the power from normal & standby main circuit

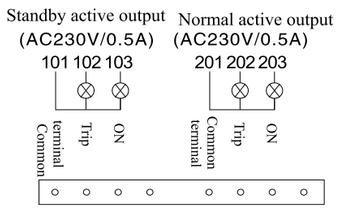


## Gen Set control

302 Gen Set start

303 Gen Set stop

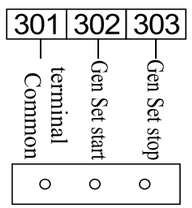


## Remote Control

401 402 remote transfer to standby power

- Active with Auto model only
- 401 402 “On” ATS will transfer to standby power, whatever normal power is available or not.
- 401 402 “OFF” ATS will return to Auto control according to transfer setting.
- If standby power is abnormal , ATS will not to be transfered

501 502 dual switch off by fire control signal

- Active by 24VDC input from fire control signal whatever Auto/Manu model ( + - polarity free)
- 24VDC “ON” , switch off both normal/standby power immediately.
- 24VDC “ON turn to OFF”, ATS will return to normal power at Auto model.

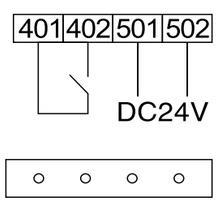






# HDQ3HB Automatic Transfer Switch

GB14048.11 / IEC60947-6-1

## Instruction for Controller Setting

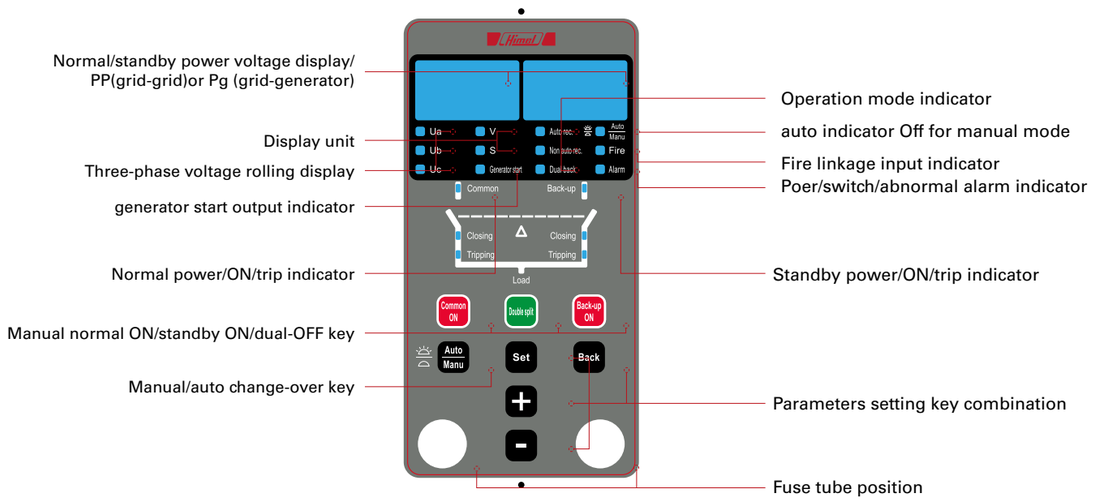


| Indicator display description | | | |
|---|---|---|---|
| **Indicator** | **Function description** | **Indicator** | **Function description** |
| Ua | ON: The displayed value is a phase-A voltage value of the power supply.<br>OFF: No. | Auto-reset | ON: Auto-switch and auto-reset mode<br>OFF: NO |
| Ub | ON: The displayed value is a phase-B voltage value of the power supply.<br>OFF: No. | | ON: Auto-switch and not-auto-reset mode<br>OFF: NO |
| Uc | ON: The displayed value is a phase-C voltage value of the power supply.<br>OFF: No. | | ON: Mutual standby mode<br>OFF: No |
| V | ON: Voltage unit<br>OFF: No. | | ON: Auto mode<br>OFF: Manual mode |
| s | ON: Time unit<br>OFF: No. | Fire control | Flash: Fire signal input<br>OFF: No |
| Generator starts | ON: Output the generator starting signal<br>OFF: No. | Alarm | Flash: System works abnormally (power supply or switch)<br>OFF: No abnormal phenomenon |
| Normal | ON: Normal power works normally<br>Flash: Normal power works abnormally<br>OFF: loss voltage of normal power (no power) | Standby | ON: Standby power works normally<br>Flash: Standby power works abnormally<br>OFF: loss voltage of standby power (no power) |
| ON (normal) | ON: Normal switch ON<br>OFF: Normal switch OFF | ON (standby) | ON: Standby switch ON<br>OFF: Standby switch OFF |
| Trip (normal) | Flash : Normal switch trips<br>OFF: | Trip (standby) | Flash : Standby switch trips<br>OFF: |

# HDQ3HB Automatic Transfer Switch

GB14048.11 / IEC60947-6-1

## Flowchart for Controller parameters setting

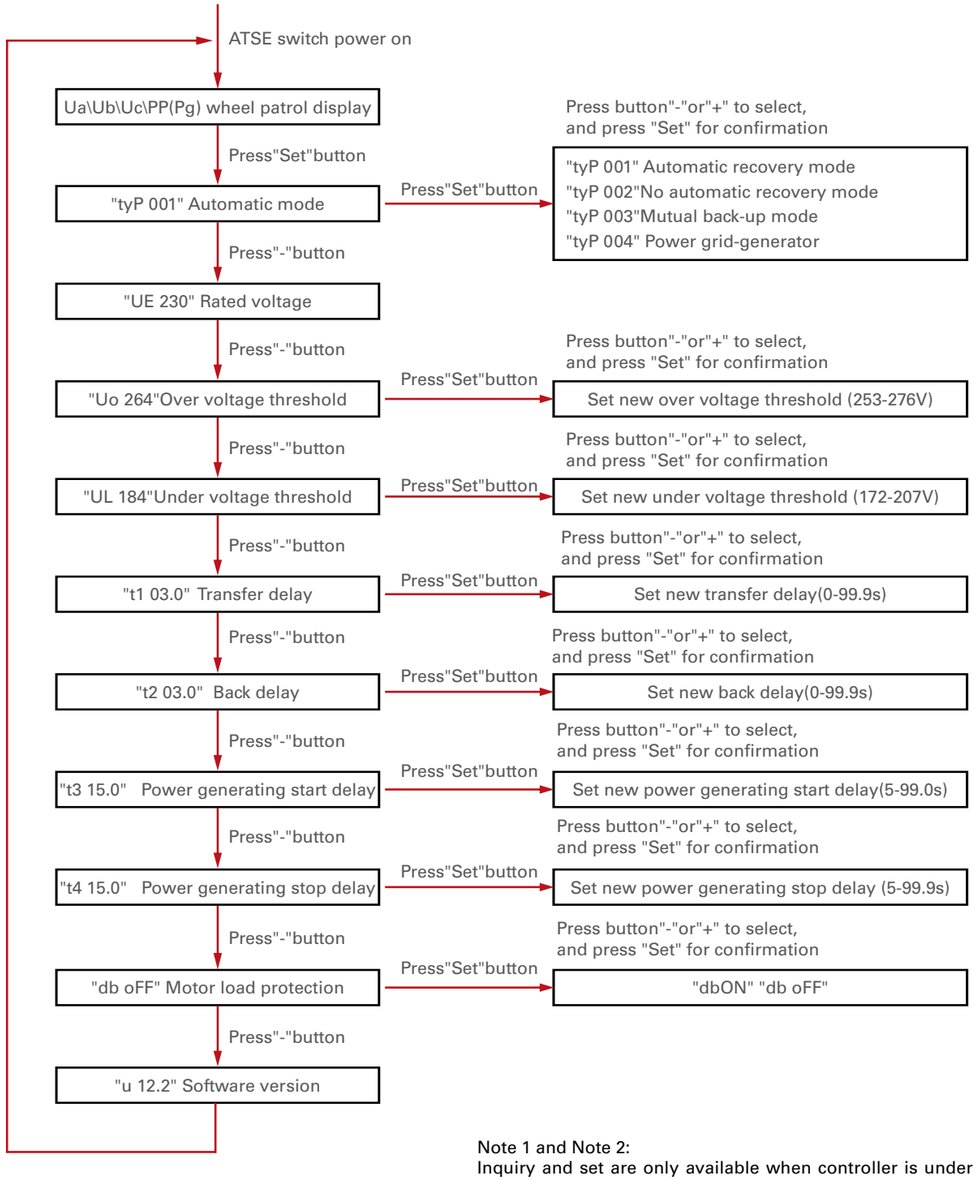


Note 1 and Note 2:
Inquiry and set are only available when controller is under power grid-generator mode.
Note 3:
Motor load protection function: incl. phase sequence identification and open-phase detection.



LOW VOLTAGE DISTRIBUTION

HDQ3HB Automatic Transfer Switch

GB14048.11 / IEC60947-6-1

## Flowchart for Auto switching action

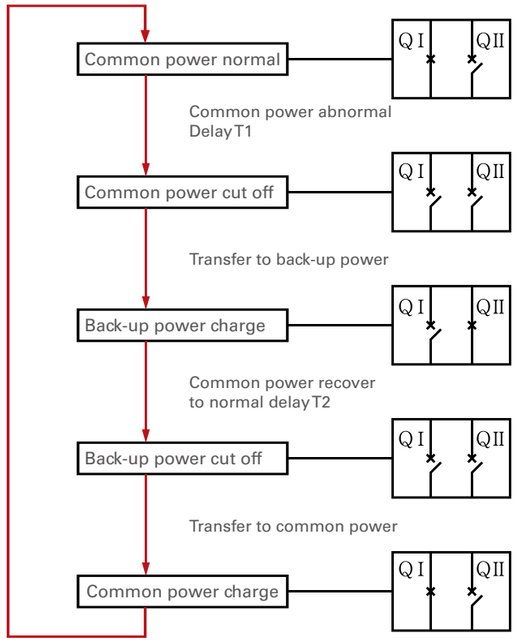


Power grid-Power grid
Automatic recovery(Automatic charge and automatic recovery) working procedure

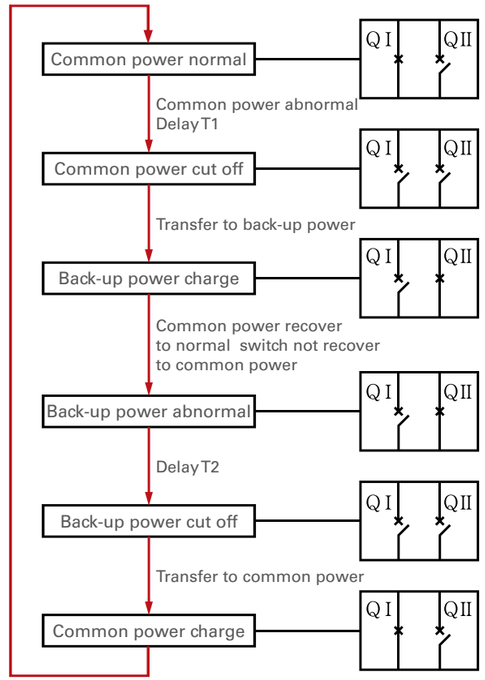


Power grid-Power grid
Mutual back-up(mutual back-up) working procedure

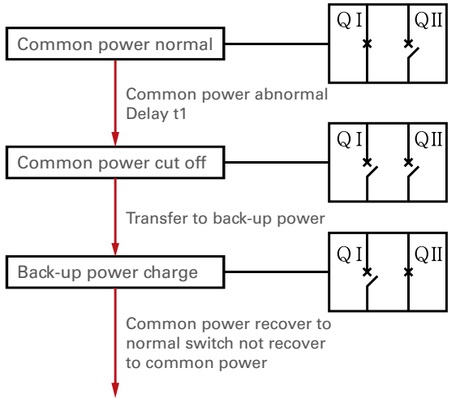


Power grid-Power grid
No automatic recover (automatic charge and automatic recovery) working process

t1: Transfer delay, time from common power abnormal till QI cut off.
t2: Recovery delay, time from common power recovering to normal till QII cut off
t3: Generator start delay, time from common power abnormal till send generator starting signal.
t4: Generator stop delay, time from recover to common power till stop sending generator starting signal
QI: Breaker for common
QII: Breaker for back-up

# HDQ3HB Automatic Transfer Switch

GB14048.11 / IEC60947-6-1

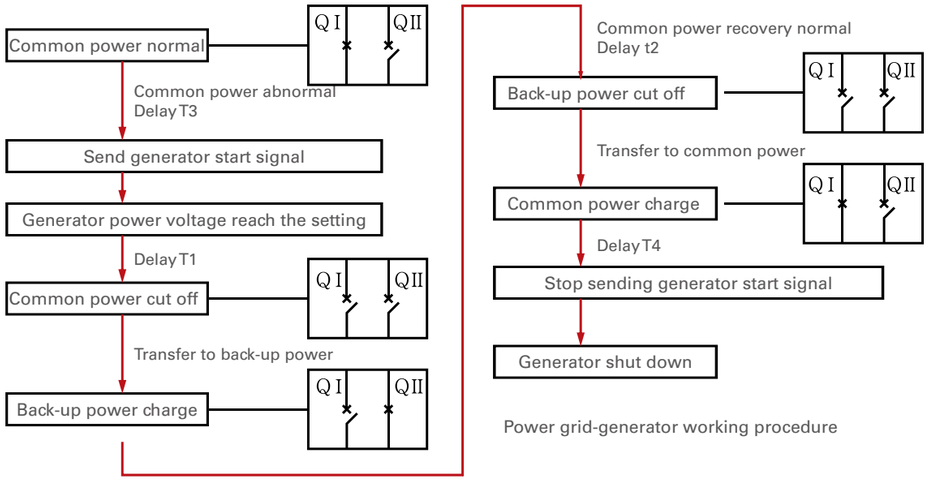


Power grid-generator working procedure

## Maintenance and service

- Maintenance and service must be performed by the qualified professional.
- Do not maintain and repair the product, when it is in use.
- This product can work reliably at the rated voltage (85%~110%) Ue. To connect the product wires, the incoming terminal, the outgoing terminal, and N phase shall be distinguished strictly. Also, the neutral line shall not be shared.
- Do not use this product in the conditions out of the normal use condition range.
  For example: no preventive measures shall be taken when there is continuous water vapor or condensation, flammable or corrosive powder, the expected short-circuit current is out of the range, the voltage is very high or low, the current exceeds the rated value, and the altitude is very high.
- To transfer manually, please use the special handle provided on this product.
- If the protective device is disconnected due to line or load failure, eliminate the failure and then power on the load.
- The product shall be checked generally during operation at regular interval (such as once in every three months).
- To check whether the product works normally, transfer the switch manually or automatically.





# HDQ3HB Automatic Transfer Switch

GB14048.11 / IEC60947-6-1

## Fault analysis and troubleshooting

The common faults and their solutions are listed below. If error happens while using the product check the following table.

| Fault | Cause | Solution |
|---|---|---|
| No display on the controller panel | The power supplied to the controller by main circuit is abnormal | Check whether the fuse tube on the controller panel is installed or burnt out. Then re-install or replace it, if necessary.<br>Check the line connection between main circuit to the controller is loose and insert it firmly, if necessary. |
| The voltage is abnormal, but the auto transfer power switch does not work | The connection between the controller and the switch body failed. | Check whether the connecting plug from the controller to the switch is loose, and whether the connector fastening screw is installed firmly. |
| The voltage is normal, but the panel displays abnormally | The connection between the power line and the circuit breaker power supply failed | Ensure the connection between the power line and the circuit breaker power supply is in good state. Check whether there is a lack of voltage during construction. |
| The alarm lamp flashes; the automatic transfer switch is switched to another circuit of power supply | One circuit of power supply failed (over-voltage, under-voltage, lack of voltage, phase loss) | Check the failed power supply for troubleshooting. |
| The alarm lamp flashes and the automatic transfer switch does not work | Two circuits of power supply failed<br>The product is in the standby power and auto-switch & not-auto-reset state | Check the failed power supply for troubleshooting.<br>Set the product working mode by the user according to the actual demands (auto-switch & auto-reset, auto-switch & not-auto-reset, mutual standby) |
| Controller displays ERROR1 | Phase sequence error | Voltage at the user incoming terminal is disconnected; check the phase sequence at the normal and standby circuit incoming terminal. |
| Controller displays ERROR2 | Mechanism blocked<br>Switch trips<br>Switch handle cracked<br>Switch contact fusion welding<br>Switch action time is too long | Manual dual-division of product; take out the normal and standby fuses from the controller and re-install them. so the controller will restart automatically.<br>If the ERROR2 is still there , please contact the manufacturer after-sales department. |
| Product display trip alarm | Lower load failure<br>Auxiliary alarm inside the plastic housing damaged | Set the controller to the Manual state, operate the product manually to the normal dual division, or standby dual division. When the load failure is eliminated, set the controller to the user required state.<br>For damaged auxiliary alarm, contact the manufacturer after-sales department. |

# ATSE2C Controller

Operation Manual

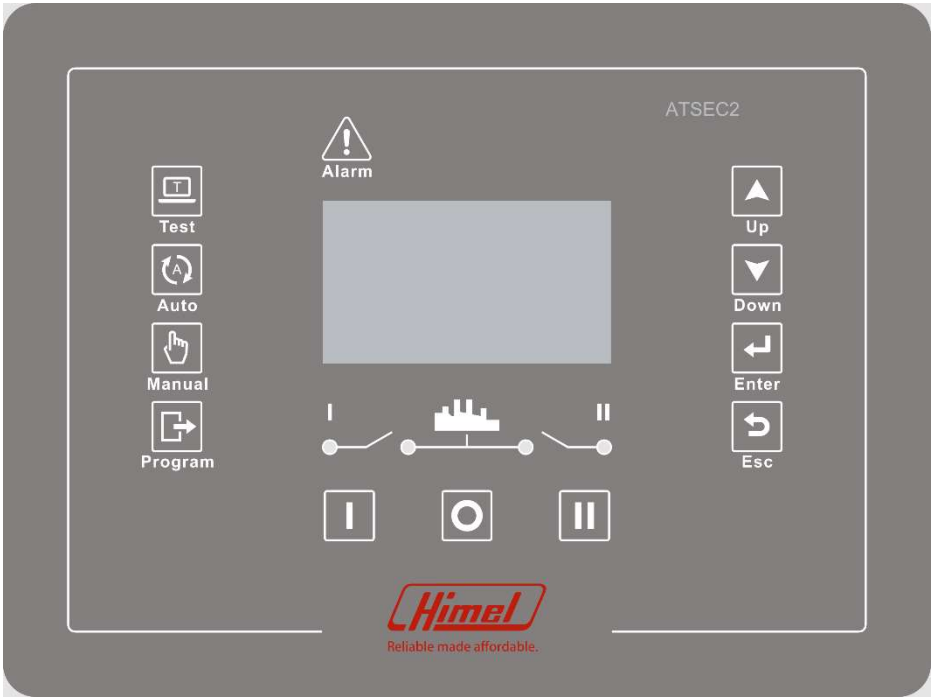

**CONTENTS PAGE**



**Attention:**

- The complete set must including 2 set of ACB， cable interlock ,220VAC motor/shunt release /closing coil / ATS Controller
- Do not install key lock with ACB, it will damaged the ACB when automatic transfer
- Do not install the under voltage release with ACB, It will impact ATS automatic transfer
- Do not use ACB's MODBUS or remote signal to Switch ON/OFF breaker by MX/XF, It will impact the ATS automatic transfer
- Please refer to HDW3 air circuit breaker’s user manual before installed ACB
- Please refer to HDW3 cable mechanical interlock ‘s user manual before assemble mechanical interlock with ACB
- Default with 2m controller cable

# 1. Product Introduction

**ATSE2C automatic transfer controller** is an intelligent ATSE controller with programmable functions, automatic measuring, LCD menu display, and digital communication. It can automatically realize voltage, frequency, phase etc. electrical parameters measurement and automatic control according to setting strategy which can reduce human operation error. It is an ideal product of ATSE.

**ATSE2C automatic transfer controller** consists of microprocessor as core. It can precisely detect two-source 3-phase voltage and make precise recognition about abnormal voltage (over-voltage, under-voltage, loss phase, over - frequency, under - frequency) and output passive control digital. This device can be widely applied to electrical devices, automatic control and debug system in industry of power, post and telecommunications, petroleum, coal, metallurgical, railway, municipal, intelligent building etc.

## Functional parameter

- Graphic LCD128x64 pixel;
- Two-source AC power input:, 3-phase 4-wire;
- Measured values, settings, and message texts are supported in English and Chinese
- 10~30VDC power supply.
- Detection function for over-voltage, under-voltage, phase loss, reverse phase sequence, over-frequency, under-frequency;
- 8-channel programmable digital input (grounding effective);
- 10-channel programmable digital output;
- Integrated RS-485 isolation interface, MODBUS protocol;
- Storage of last 200 events;
- Real time clock
- All parameters are field programmable, use password access to avoid mis-operation by unprofessional persons;
- The fixed washer is IP65 degree of protection
- Module structure design, Retardant PC cover, pluggable terminal, embedded installation mode, compact structure and easy installation;

# 2. Front panel touch button function

| Icon | Button name | Function description |
|---|---|---|
| | Position 1 | In Manual mode, press this button to transfer load to position1 |
| | Position 2 | In Manual mode, press this button to transfer load to position 2 |
| | Position 0 | In Manual mode, press this button to transfer load to position 0 |
| | Test mode | Press this button for 3 seconds to enter test function. |
| | Auto mode | Press this button for 3 seconds to set controller as Auto mode. |
| | Manual mode | Press this button for 3secondsto set controller as manual mode. |
| | Programming mode | Press this button for 3 seconds to set controller as programming mode. |
| | Increase/ up | In menu page, press this button to scroll page.<br>In parameter setting page.<br>Press this key to up cursor or increase value. |
| | Decrease / down | In menu page, press this button to scroll page.<br>In parameter setting page.<br>Press this key to down cursor or decrease value.. |
| | Enter | Press this button to enter sub-menu or confirm setting information. |
| | Return | Press this button to return prior menu screen, press this button for 3seconds to lock/unlock the button.<br>Press it can clear fault alarm when alarm occur. |

# 3. Front panel LED

- Alarm LED (Red) –when fixed, indicates an alarm is active;
- S1 voltage status LED (Green) –S1 normal, fixed; S1 abnormal, blinking;
- S2 voltage status LED (Green) –S2 normal, fixed; S2 abnormal, blinking;
- Position 1 status LED (Green) –on, POS1 close; off, POS1open;
- Position 2 status LED (Green) –on, POS2 close; off, POS2 open;

# 4. Working mode

- Programming mode: parameter setting operation under this mode, long pressing “programming mode” button for 3s to enter. All measuring values and status LED display keep activated. Set as programming mode before visiting programming menu.
- Manual mode: can control switch manually, long pressing “manual mode” button for 3s to enter. Pressing I close and II close can change the switch position. Pressing 0 can open the two sources.
- Automatic mode: long pressing “automatic mode” button for 3s to enter. Under automatic mode, device automatically executes operation of open/close switch and start/stop generator. When the time of exceeding limit of prior source is longer than the set delay time, the device will open the load of the main source and connect to the emergency source.

# 5. Main menu

- Main menu consists of parameter setting, Voltage Levels Menu, Frequency Levels Menu, Timer Menu, Programmable Control, communication parameters and Language Menu to make it convenient for user to fast visit measuring value and revise parameters.
- Parameter setting: this operation is only valid under the programming mode. When there are changes of parameter, it will show “save parameter?” before returning to main menu.
  Select ”YES” to save parameters. For parameter setting please refer as below.

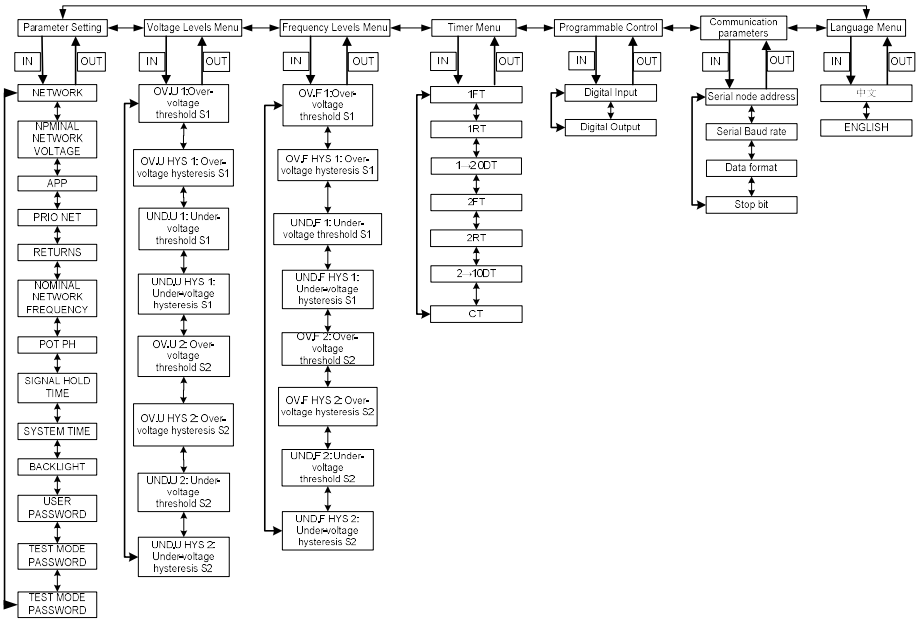

## 5.1、Parameter Setting

| No. | Option | Definition | Default | Adjustment Range |
|---|---|---|---|---|
| 1.1 | NETWORK | Network Type | 4NBL | 4NBL |
| 1.2 | NOM.VOLT. | P-P Voltage | 400 | 50-690V |
| 1.3 | APP | M-M:Mains to Mains Supply<br>M-G:Mains to Generator Supply<br>G-M:Generator to Mains Supply | M-M | M-M/M-G/G-M |
| 1.4 | PRIO NET | Choose S1 or S2 for Priority Net | S1 | S1/S2 |
| 1.5 | RETURNS | Inhibit the automatic retransfer | Automatic retransfer to the priority source | Automatic retransfer to the priority source/<br>Don't automatic retransfer to the priority source/<br>Backup |
| 1.6 | NOM.FREQ. | Nominal network frequency | 50 Hz | 50/60Hz |
| 1.7 | POT PH. | Select and verify Phase Sequence | OFF | L1L2L3/ L3L2L1/ OFF |
| 1.8 | SIGNAL HOLD TIME | Pulse time of the opening and closing relay output | 5.0S | 0.1-20.0S |
| 1.9 | SYSTEM TIME | \ | \ | Real time |
| 1.10 | BACKLIGHT | Min | Active | Active /1-30Min |
| 1.11 | USER PASSWORD | \ | 0101 | 0000-9999 |
| 1.12 | TEST MODE PASSWORD | \ | 0021 | 0000-9999 |
| 1.13 | FATORY SET | Set parameter to fatory default | yes | Yes/no |

## 5.2、Voltage Levels Menu：

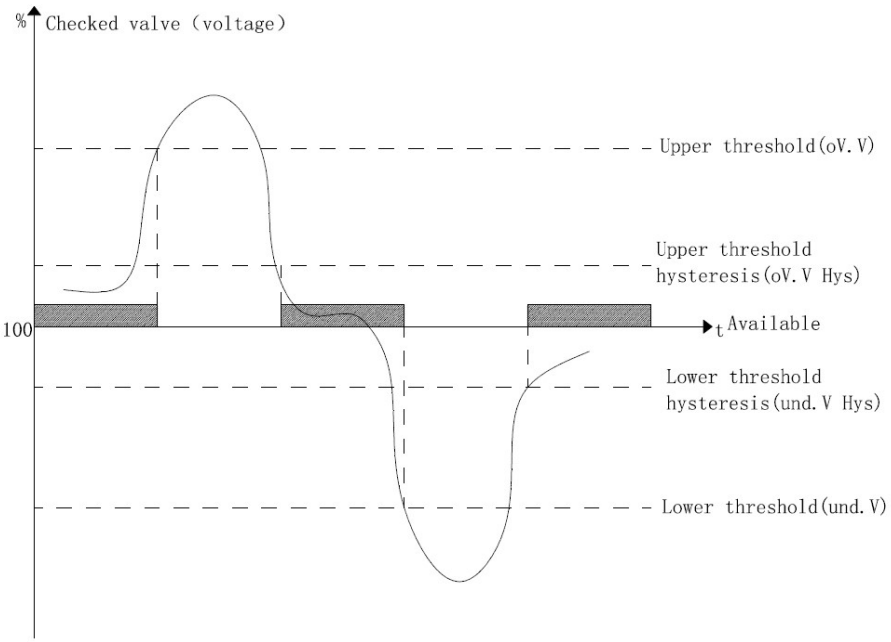


| No. | Option | Definition | Adjustment Range |
|---|---|---|---|
| 2.1 | OV.U 1:Over-voltage threshold S1 | 115% | 102-130% |
| 2.2 | OV.U HYS 1: Over-voltage hysteresis S1 | 110% | 101-129% |
| 2.3 | UND.U 1: Under-voltage threshold S1 | 85% | 70-98%% |
| 2.4 | UND.U HYS 1: Under-voltage hysteresis S1 | 95% | 71-99% |
| 2.5 | OV.U 2: Over-voltage threshold S2 | 115% | 102-130% |
| 2.6 | OV.U HYS 2: Over-voltage hysteresis S2 | 110% | 101-129% |
| 2.7 | UND.U 2: Under-voltage threshold S2 | 85% | 70-98% |
| 2.8 | UND.U HYS 2: Under-voltage hysteresis S2 | 95% | 71-99% |

## 5.3、Frequency Levels Menu:

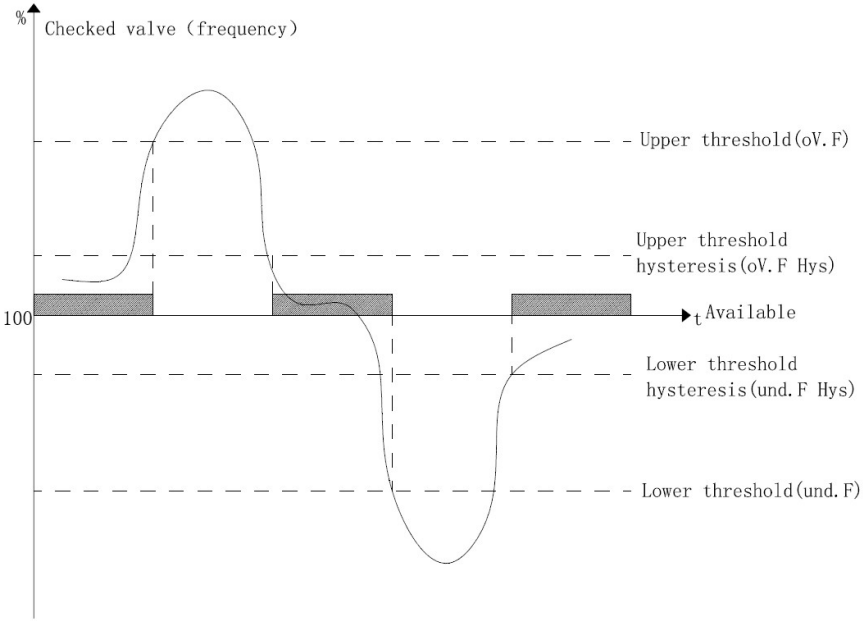


| No. | Option | Definition | Adjustment Range |
|---|---|---|---|
| 3.1 | OV.F 1:Over-voltage threshold S1 | OFF | OFF/102-120% |
| 3.2 | OV.F HYS 1: Over-voltage hysteresis S1 | 103% | 101-119% |
| 3.3 | UND.F 1: Under-voltage threshold S1 | OFF | 80-98% |
| 3.4 | UND.F HYS 1: Under-voltage hysteresis S1 | 97% | 88-99% |
| 3.5 | OV.F 2: Over-voltage threshold S2 | OFF | OFF/102-120% |
| 3.6 | OV.F HYS 2: Over-voltage hysteresis S2 | 103% | 101-119% |
| 3.7 | UND.F 2: Under-voltage threshold S2 | OFF | 80-98% |
| 3.8 | UND.F HYS 2: Under-voltage hysteresis S2 | 97% | 88-99% |

## 5.4、Timer Menu:

| No. | Option | Definition | Default | Adjustment Range |
|---|---|---|---|---|
| 4.1 | 1FT | Source 1 Failure Timer | 5S | 0-60S |
| 4.2 | 1RT | Source 1 Return Timer | 2Min | 0-60Min |
| 4.3 | 1→2 0DT | Source 1 to Source 2 dead time in 0 position | 5S | 2-20S |
| 4.4 | 2FT | Source 2 Failure Timer | 5S | 0-60S |
| 4.5 | 2RT | Source 2 Return Timer | 2.0 Min | 0-60.0Min |
| 4.6 | 2→1 0DT | Source 2 to Source 1 dead time in 0 position | 5S | 2-20S |
| 4.7 | CT | Generator cool down Timer | 5Min | 0-60Min |

## 5.5、Programmable Control:

| No. | Option | Default | Adjustment Range |
|---|---|---|---|
| 5.1 | Digital Input | | 1-5 |
| 5.1.x.1 | Input function | | |
| 5.1.x.2 | Contact Type | NO | NO/NC |
| 5.1.x.3 | Input delay | 0.05S | 0.01-600.00S |
| 5.2 | Digital Output | | 6-10 |
| 5.2.x.1 | Output function | | |
| 5.2.x.2 | Contact Type | NO | NO/NC |

## INPUT MENU

| Input Menu | Input code definition |
|---|---|
| Inhibit | Inhibit input function |
| Forced to pos. 0 | The transfer switch is immediately driven to 0 position, and the controller in manu mode, meantime when the input signal disappear, the controller feedback to auto mode |
| Priority | Priority network select; change S1 or S2 priority state when input is activated, return to current priority state when input is not activated |
| Remote control | Remote control is enable when input is activated |
| Remote position 1 | Switch transfer to position 1 when input is activated |
| Remote position 2 | Switch transfer to position 2 when input is activated |
| Remote position 0 | Switch transfer to position 0 when input is activated |
| Test off load | Activates on an off load test, this will start/stop the generator without transferring the load to S2 |

Parameter Setting

| | |
|---|---|
| Test on load | Activates on an on load test, this will start/stop the generator with transferring the load to S2 |
| LS | Verify the generator don't overload before transfer to S2 |

OUTPUT MENU

| Output Menu | Output code definition |
|---|---|
| Inhibit | Inhibit output function |
| ATS ready | The output signal is activated when switch and controller are OK |
| S1 available | The output signal is activated when S1 available |
| S2 available | The output signal is activated when S2 available |
| Alarm | The output signal is activated when controller failure |
| Manu mode | The output signal is activated when controller in manu mode |
| Auto mode | The output signal is activated when controller in auto mode |
| Test mode | The output signal is activated when controller in auto mode |
| Position 1 | The output signal is activated when ATS in position 1 |
| Position 2 | The output signal is activated when ATS in position 2 |
| Position 0 | The output signal is activated when ATS in position 0 |
| Forced to pos. 0 | The output signal is activated when ATS forced to 0 position |
| LS | Verify the generator don't overload before transfer to S2 （load shield） |
| ATS Source N | Auxiliary Source N |
| ATS Source L | Auxiliary Source L |
| Start generator | When APP is M-G/G-M, the mains source failure，the output signal is activated |
| Universal | The Communication control |

## 5.6、Communication parameters

| No. | Option | Unit | Default value | Range |
|---|---|---|---|---|
| 5.1 | Serial node address | \ | 3 | 001-254 |
| 5.2 | Serial Baud rate | \ | 19200 | 2400/4800/9600/19200/38400 |
| 5.3 | Data format | \ | 8N | 8N/8O/8E/7O/7E |
| 5.4 | Stop bit | \ | 1 | 1/2 |

Note: Data format '8N' means 8 data bits, 'N' means no parity, '8O' means 8 data bits, 'O' means odd parity.'8E' means 8 data bits, 'E' means even parity.

'7N' means 7 data bits, 'N' means no parity, '7O' means 7 data bits, 'O' means odd parity.'7E' means 8 data bits, 'E' means even parity.

## 5.7、Language Menu：

| No. | Option | Definition | Default value | Range |
|---|---|---|---|---|
| 7.1 | Language Menu | \ | Chinese | Chinese/English |

### ●Power supply status icon, refer topic1:

| Page | Example | Note |
|---|---|---|
| Pic.1<br>Power supply status | 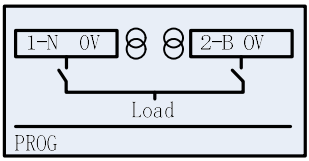 | I Main： S1 is normal power supply, next to it is actual voltage value.<br>II Backup：S2 is reserved power supply, next to it is actual voltage value. |

### ●Data display icon, refer to pic2-pic7

| Page | Example | Note |
|---|---|---|
| Pic2.<br>Data display | 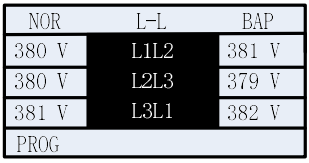 | Line voltage(380V) |
| Pic3.<br>Data display | 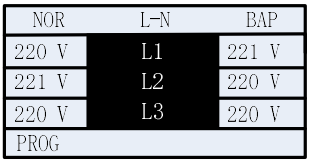 | Phase voltage(220V) |
| Pic4.<br>Data display | 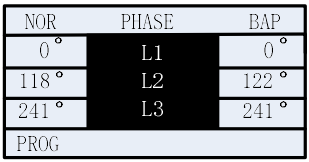 | Actual phase<br>0°<br>120°<br>240° |
| Pic5.<br>Data display | 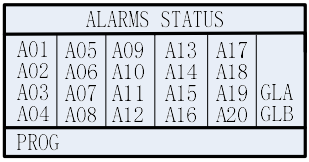 | Alarm status, If there is A01 alarm, A01 in the pic will be selected |

| | | |
|---|---|---|
| Pic6.<br>Data display | ALARMS STATUS<br>A21 A25 A29 UA1 UA5<br>A22 A26 A30 UA2 UA6<br>A23 A27 A31 UA3 UA7 GLA<br>A24 A28 A32 UA4 UA8 GLB<br>PROG | Alarm status, If there is A21 alarm, A21 in the pic will be selected |
| Pic7.<br>Data display | NOR CTRL THD BAP<br>460V MAX ULL 460V<br>340V MIN ULL 340V<br>52.5Hz MAX Hz 52.5Hz<br>47.5Hz MIN Hz 47.5Hz<br>PROG | Control threshold, The max/min value of voltage and frequency of power supply |

## ●Statistic data icon, refer to pic8-pic12

| Page | Example | Note |
|---|---|---|
| Pic8 Statistic data | STATISTICS<br>000000 CNT AUT 000000<br>000000 CNT MAN 000000<br>000000h T-LOAD 000000h<br>PROG | CNT AUT: closing times of line1(Left) and line2(Right) under automatic mode;<br>CNT MAN: closing times of line1(Left) and line2(Right) under manual mode;<br>T-LOAD: The current time when S1 or S2 supply power to load |
| Pic9 Statistic data | STATISTICS<br>T-NoLOAD 000001h<br>POWER DOWN 000013<br>A03 000001<br>A04 000001<br>PROG | T-NOLOAD: Load blackout time<br>POWER DOWN：Power off times<br>A03：A03 alarm times<br>A04：A04 alarm times |
| Pic10Statistic data | INPUTS<br>01 05 09 13 17<br>02 06 10 14 18<br>03 07 11 15 19<br>04 08 12 16 20<br>PROG | Programmable input, if there is signal detected in 01 input port, then the 01 will be selected.(1~3 has been locked) |
| Pic11<br>Statistic data | OUTPUTS<br>01 05 09 13 17<br>02 06 10 14 18<br>03 07 11 15 19<br>04 08 12 16 20<br>PROG | Programmable output, if there is output action in 01 output port, the 01 will be selected.(1~6 has<br>been locked) |
| Pic12<br>Statistic data | DATE/TIME<br>2017-04-07 (5)<br>10:28:02<br>29.4℃<br>PROG | time/temperature |

## ●Event record Icon, refer to pic13

| page | example | Note |
|---|---|---|
| Pic13<br>Event record | S1 Close OK<br>2017-01-18 19:26:25<br>ULL 374V 375V 375V<br>F 50.0Hz 65/100<br>PROG | Device Event record |

## ●Commissioning Icon, refer to pic14、15

| page | example | Note |
|---|---|---|
| Pic14<br>Test off load | Main 01/03<br>Test offload<br>Test onload<br>TEST | Activates on an off load test, this will start/stop the generator without transferring the load to S2,when activation is missed ,the relay reset. |
| Pic15<br>Test on load | Main 02/03<br>Test offload<br>Test onload<br>TEST | Activates on an on load test, this will start/stop the generator with Transferring the load to S2, when activation is missed, the ATS transfer to main side, and relay reset. |

# 6. Wiring diagram

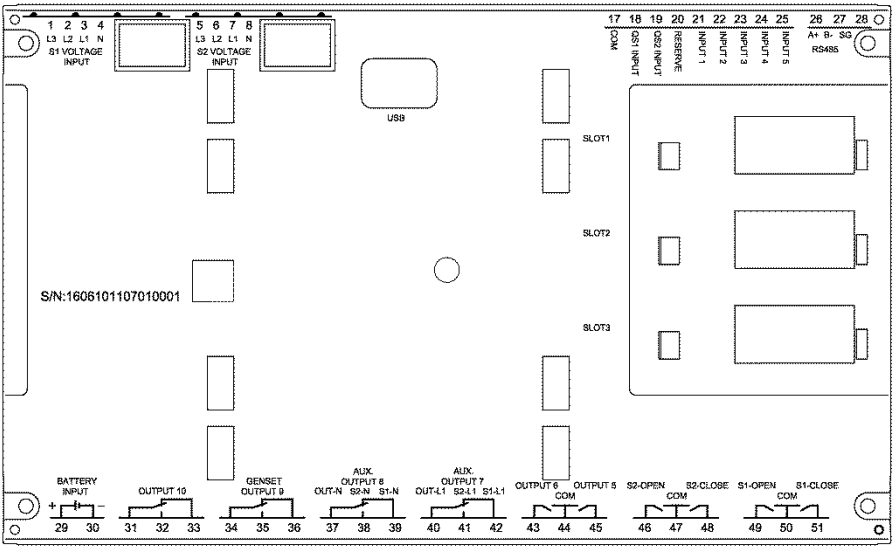


## 6.1 Terminal definition and description：

| Terminal No. | Item | Function description | Note |
|---|---|---|---|
| 1 | L3 | S1 AC 3-phase 4-wire voltage input | If single-phase, only L1, N connected L1,Nare AC power supply terminal. |
| 2 | L2 | | |
| 3 | L1 | | |
| 4 | N | | |
| 5 | L3 | S2 AC 3-phase 4-wire voltage input | If single-phase, only L1, N connected L1,Nare AC power supply terminal. |
| 6 | L2 | | |
| 7 | L1 | | |
| 8 | N | | |
| 17 | COM | Module grounding | Module ground terminal |
| 18 | QS1 INPUT | 1 position switch closure detection | Grounding effective |
| 19 | QS2 INPUT | 2 position switch closure detection | |
| 20 | RESERVE | RESERVE | |
| 21 | INPUT1 | 1 position switch TRIP detection | Grounding effective |
| 22 | INPUT2 | 2 position switch TRIP detection | |
| 23 | INPUT3 | input port function defined by user | |
| 24 | INPUT4 | | |
| 25 | INPUT5 | | |

| | | | |
|---|---|---|---|
| 26 | A | RS485 communication interface | RS485A |
| 27 | B | | RS485B |
| 28 | SG | | RS485 grounding |
| 29 | BATTERY+ | Positive electrode of DC power supply | |
| 30 | BATTERY- | Negative electrode of DC power supply | |
| 31 | OUT10 | Relay common | Programmable output port 10A |
| 32 | | Relay normally open | |
| 33 | | Relay normally close | |
| 34 | OUT9 | Genset common | Genset start output port 10A |
| 35 | | Genset start normally open | |
| 36 | | Genset start normally close | |
| 37 | OUT8 | change-over switch N | auxiliary power output port 10A |
| 38 | | S2 power supply N | |
| 39 | | S1 power supply N | |
| 40 | OUT7 | change-over switch L1 | auxiliary power output port 10A |
| 41 | | S2 power supply L1 | |
| 42 | | S1 power supply L1 | |
| 43 | OUT6 | Relay output | Programmable output port 10A |
| 44 | COM | 43 and 45 Common | |
| 45 | OUT5 | Relay output | output port 10A |
| 46 | S2-OPEN | BRK2 open output | output port 10A |
| 47 | COM | 46 and 48 Common | |
| 48 | S2-CLOSE | BRK2 close output | output port 10A |
| 49 | S1-OPEN | BRK1 open output | output port 10A |
| 50 | COM | 49 and 51 Common | |
| 51 | S1-CLOSE | BRK1 close output | output port 10A |

## 6.2 Terminal diagram (ATSE2C controller with air circuit breaker)

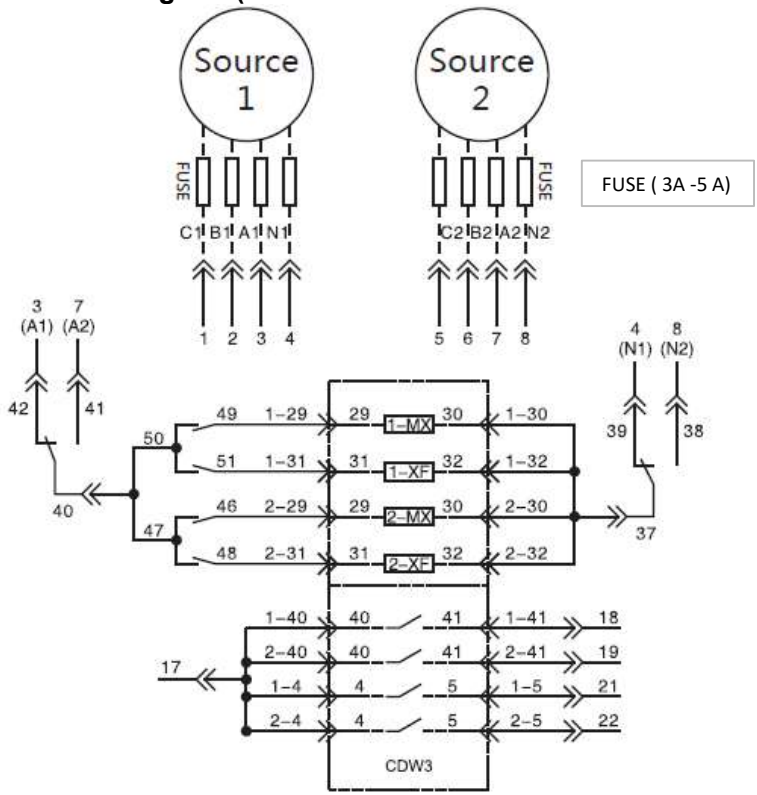


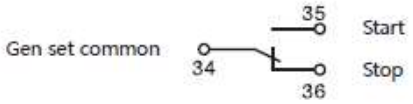


1 - MX Source 1 breaker - shunt release
1 - XF Source 1 breaker - closing coil

2 - MX Source 2 breaker - shunt release
2 - XF Source 2 breaker - closing coil

1-40 1-41 Source 1 breaker - Auxiliary contact
2-40 2-41 Source 2 breaker - Auxiliary contact

1-4 1-5 Source 1 breaker - Alarm contact
2-4 2-5 Source 2 breaker - Alarm contact

Note
1: Default 2m cable
2: MX - shunt release 220VAC
XF - Closing coil 220VAC
OF3- Auxilary contact
AL - Alarm contact
3: The ACB must install with cabel interlock
4: out of dotted line is connect to ACB terminal by customer
5: ATS already have under & over voltage protection, do not install undervoltage release into ACB
6: Intelligent controller iTR326H, don't use MODBUS control ACB ON/OFF( MX+XF)

# 7. Mechanical dimension and panel opening

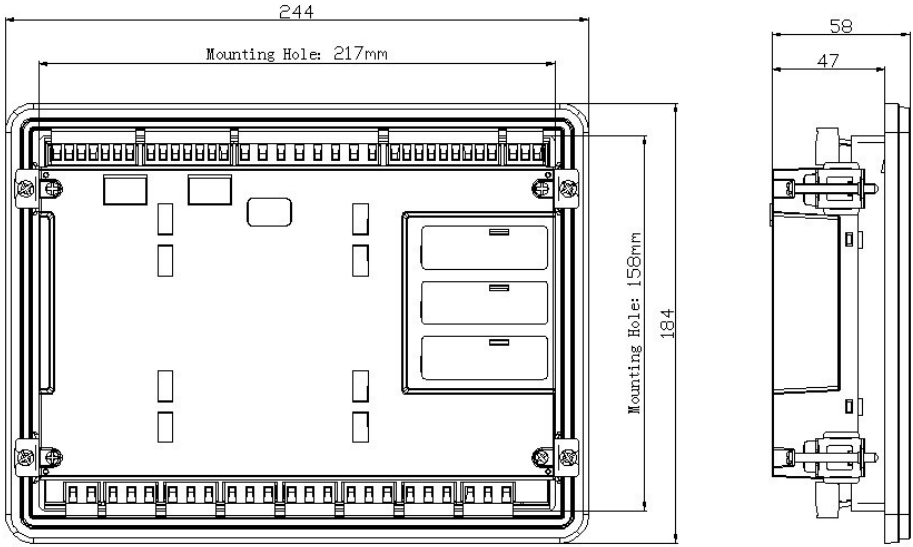


# 8. Technical parameters

| | |
|---|---|
| **1、AC supply: terminal 3,4 and 7,8** | |
| Rated voltage | 400VAC(LL) |
| Operating limit value | 90-300VAC(LN) |
| Frequency | 45-65Hz |
| Power consumption | 10W |
| **2、DC supply：terminal 29,30** | |
| Rated battery voltage | 24VDC |
| Operating limit value | 10-30VDC |
| Max power consumption | 10W |
| **3、Digital input：terminal 17—25** | |
| Input type | negative |
| Input current | ≤8mA |
| Low input signal | ≤2.2V |
| High input signal | ≥3.4V |
| **4、RS485serial interface：terminal 26,27,28** | |
| Interface Type | isolation |
| Baud rate | 2400-38400bps |

| | |
|---|---|
| **5、Output 31-33（OUT1）、34-36（OUT2）、37-39(OUT3)、40-42(OUT4)** | |
| Contact Type | single-pole double throw |
| Rated value | DC：10A、30V，AC：10A、250V |
| **6、Output 43(OUT5)、46（OUT6）、48(POSITION O)、49(POSITION Ⅱ)、51(POSITION Ⅰ)** | |
| Contact Type | single-pole single throw |
| Rated value | DC：10A、30V，AC：10A、250V |
| **7、Working environment condition** | |
| Working temperature | -25℃-70℃ |
| Storage temperature | -30℃-80℃ |
| Relative humidity | 20%-93% |
| Max environmental pollution | Level 3 |

# Annex A. Alarm code description

| Code | Description | Alarm reason |
|---|---|---|
| A03 | Position1 timeout | No open/close operation of breaker 1 within set time |
| A04 | Position2 timeout | No open/close operation of breaker 2 within set time |
| A05 | Wrong phase sequence of S1 | Phase sequence detected by S1 does not meet with the set one |
| A06 | Wrong phase sequence of S2 | Phase sequence detected by S2 does not meet with the set one |
| A01 | Not used | Not used |
| A02 | Not used | Not used |
| A07 | Not used | Not used |
| A08 | Not used | Not used |
| A09 | Not used | Not used |
| A10<br>…<br>A17 | Not used | |

# Annex B: Modbus protocol

●Support function code and data type.

| | | | |
|---|---|---|---|
| Read function | 03 04 | Write function | 10 |
| Read only data | RO | Readwrite-able data | RW |

| Address (DEC) | Type | Name | Range | Note | Register |
|---|---|---|---|---|---|
| 10000 | RO | POSITION1 INPUT state | 0: input on<br>1: input off | | 1 |
| 10001 | RO | POSITION2 INPUT state | 0: input on<br>1: input off | | 1 |
| 10002 | RO | POSITION 0 INPUT state | 0: input on<br>1: input off | | 1 |
| 10003~10007 | RO | ProgrammableINPUT1~ INPUT5 input terminal state | 0: input on<br>1: input off | | 5 |
| 10020 | RW | Programmable output 1 | 0: no action<br>1: action | | 1 |
| 10021 | RW | Programmable output 2 | As above | | 1 |
| 10022 | RW | Programmable output 3 | As above | | 1 |
| 10023 | RW | Programmable output 4 | As above | | 1 |
| 10024 | RW | Programmable output 5 | As above | | 1 |
| 10025 | RW | Programmable output 6 | As above | | 1 |
| 10026 | RW | No Use | As above | | 1 |
| 10027 | RW | POSITION0 switch output | As above | | 1 |
| 10028 | RW | POSITION1 switch output | As above | | 1 |
| 10029 | RW | POSITION2 switch output | As above | | 1 |
| 10040~10071 | RO | System alarm Alarm01~ Alarm32 | 0: no alarm<br>1: alarm | | 32 |
| 10120 | RO | 1 Position state | 0: switch off<br>1: switch on | | 1 |
| 10121 | RO | 2 Position state | 0: switch off<br>1: switch on | | 1 |
| 10123 | RO | 0 position state | 0: switch off<br>1: switch on | | 1 |
| 10124 | RO | Source 1 power status | | *Note 1* | 1 |
| 10125 | RO | Source 2 power status | | *Note 1* | 1 |
| 10126 | RO | Position 1 operation times in AUTO mode | 0~999999 | | 2 |
| 10128 | RO | Position 2 operation times in AUTO mode | 0~999999 | | 2 |
| 10130 | RO | Position 1 operation times in MANU mode | 0~999999 | | 2 |
| 10132 | RO | Position 2 operation times in MANU mode | 0~999999 | | 2 |

| | | | | | |
|---|---|---|---|---|---|
| 10134 | RO | A03 alarm times | 0~999999 | | 2 |
| 10136 | RO | A04 alarm times | 0~999999 | | 2 |
| 10138 | RO | Source 1 supply hours | 0~999999 | | 2 |
| 10140 | RO | Source 2 supply hours | 0~999999 | | 2 |
| 10142 | RO | No load hours | 0~999999 | | 2 |
| 10144 | RO | ATSC power down times | 0~999999 | | 2 |
| 10170 | RO | Serial Number | | | 8 |
| 10178 | RO | HardWare Version | | | 1 |
| 10179 | RO | SoftWare Version | | | 1 |
| 10184 | RW | System time–second | 0~59 | | 1 |
| 10185 | RW | System time –minute | 0~59 | | 1 |
| 10186 | RW | System time –hour | 0~23 | | 1 |
| 10187 | RW | System time –day | 1~31 | | 1 |
| 10188 | RW | System time –month | 1~12 | | 1 |
| 10189 | RW | System time –year | 2010~2200 | | 1 |
| 10190 | RO | Ambient Temperature | | *Note 2* | 2 |
| 10192 | RO | Source 1 A phase voltage | | Unit (V) | 1 |
| 10193 | RO | Source 1 B phase voltage | | Unit (V) | 1 |
| 10194 | RO | Source 1 C phase voltage | | Unit (V) | 1 |
| 10195 | RO | Source 1 avg phase voltage | | Unit (V) | 1 |
| 10196 | RO | Source 1 line voltage UAB | | Unit (V) | 1 |
| 10197 | RO | Source 1 line voltage UBC | | Unit (V) | 1 |
| 10198 | RO | Source 1 line voltage UCA | | Unit (V) | 1 |
| 10199 | RO | Source 1 avg line voltage | | Unit (V) | 1 |
| 10200 | RO | Source 1 A phase angle | | Unit (°) | 1 |
| 10201 | RO | Source 1 B phase angle | | Unit (°) | 1 |
| 10202 | RO | Source 1 C phase angle | | Unit (°) | 1 |
| 10203 | RO | Source 1 phase sequence | | | 1 |
| 10204 | RO | Source 1 frequency | | Unit (0.1Hz) | 1 |
| 10205 | RO | Source 2 A phase voltage | | Unit (V) | 1 |
| 10206 | RO | Source 2 B phase voltage | | Unit (V) | 1 |
| 10207 | RO | Source 2 C phase voltage | | Unit (V) | 1 |
| 10208 | RO | Source 2 avg phase voltage | | Unit (V) | 1 |

| | | | | | |
|---|---|---|---|---|---|
| 10209 | RO | Source 2 line voltage UAB | | Unit (V) | 1 |
| 10210 | RO | Source 2 line voltage UBC | | Unit (V) | 1 |
| 10211 | RO | Source 2 line voltage UCA | | Unit (V) | 1 |
| 10212 | RO | Source 2 avg line voltage | | Unit (V) | 1 |
| 10213 | RO | Source 2 A phase angle | | Unit (°) | 1 |
| 10214 | RO | Source 2 B phase angle | | Unit (°) | 1 |
| 10215 | RO | Source 2 C phase angle | | Unit (°) | 1 |
| 10216 | RO | Source 2 phase sequence | | | 1 |
| 10217 | RO | Source 2 frequency | | Unit (0.1Hz) | 1 |
| 40005 | RW | ATSC operating mode | 1~4*Note 3* | Default: 1 | 1 |
| 40006 | RW | Backlight ON time (min) | 1~31*Note4* | Default: 31 | 1 |
| 40007 | RW | Test Mode password | 0000~9999 | Default:4 000 | 1 |
| 40009 | RW | User password | 0000~9999 | Default:1 000 | 1 |
| 40017 | RW | ATSC communication node address | 0~255 | Default: 3 | 1 |
| 40018 | RW | -Baud rate | 2~6*Note5* | Default: 3 | 1 |
| 40019 | RW | -Data format | 1~5*Note6* | Default: 1 | 1 |
| 40020 | RW | -Stop bit | 1~2 | Default: 1 | 1 |
| 40027 | RW | NPMinalNetWork voltage | 50~400 | Default: 400 | 1 |
| 40028 | RW | System rated frequency | 1：50Hz<br>2：60Hz | Default: 1 | 1 |
| 40029 | RW | NetWork | 1~4*Note7* | Default: 1 | 1 |
| 40030 | RW | APP | 1~4*Note8* | Default: 1 | 1 |
| 40031 | RW | Prior Net | 1:line1 as normal<br>2:line2 as normal | Default: 1 | 1 |
| 40032 | RW | Return to main power supply | 1~3*Note9* | Default: 2 | 1 |
| 40033 | RW | Off position | 1~3*Note10* | Default: 2 | 1 |
| 40035 | RW | Source 1 normal delay (sec) | 0~9999 | Default: 10 | 1 |
| 40036 | RW | Source 1 abnormal delay (sec) | 0~9999 | Default: 5 | 1 |
| 40037 | RW | Source 2 normal delay (sec) | 0~9999 | Default: 10 | 1 |

| | | | | | |
|---|---|---|---|---|---|
| 40038 | RW | Source 2 abnormal delay (sec) | 0~9999 | Default: 5 | 1 |

| | | | | | |
|---|---|---|---|---|---|
| 40040 | RW | Phase sequence detection | 1~3*Note11* | Default: 3 | 1 |
| 40041 | RW | Aux Connector | 1~3*Note14* | Default: 2 | 1 |
| 40049 | RW | S1 Under-voltage threshold (%) | 70~98 | Default: 85 | 1 |
| 40050 | RW | S1 Under-voltage return threshold (%) | 71~99 | Default: 90 | 1 |
| 40052 | RW | S1 Over-voltage threshold (%) | 102~130 | Default: 115 | 1 |
| 40053 | RW | S1 Over-voltage return threshold (%) | 101~129 | Default: 110 | 1 |
| 40055 | RW | S1 Under-frequency threshold(%) | 80~99 | Default: 95 | 1 |
| 40057 | RW | S1 Over-frequency threshold (%) | 101~120 | Default:1 05 | 1 |
| 40063 | RW | S1 Under-frequencyreturn threshold (%) | 88~100 | Default: 98 | 1 |
| 40064 | RW | S1 Over-frequency return threshold (%) | 100~119 | Default: 102 | 1 |
| 40070 | RW | S2 Under-voltage threshold (%) | 70~98 | Default: 85 | 1 |
| 40071 | RW | S2 Under-voltage return threshold (%) | 71~99 | Default: 90 | 1 |
| 40073 | RW | S2 Over-voltage threshold (%) | 102~130 | Default: 115 | 1 |
| 40074 | RW | S2 Over-voltage return threshold (%) | 101~129 | Default: 110 | 1 |
| 40076 | RW | S2 Under-frequency threshold(%) | 80~99 | Default: 95 | 1 |
| 40078 | RW | S2 Over-frequency threshold (%) | 101~120 | Default:1 05 | 1 |
| 40084 | RW | S2 Under-frequencyreturn threshold (%) | 88~100 | Default: 98 | 1 |
| 40085 | RW | S2 Over-frequency return threshold (%) | 100~119 | Default: 102 | 1 |
| 40088 | RW | Ⅰ→Ⅱ 0DT(sec) | 0~20 | | |
| 40090 | RW | Signal hold time (0. 1s/unit) | 0~200 | Default: 50 | 1 |
| 40094 | RW | Ⅱ→Ⅰ 0DT(sec) | 0~20 | | |
| 40106 | RW | Genset Cool Time (min) | 0~60 | Default: 5 | 1 |
| 40147 | RW | Programmable input1 -input function | *Note12* | Default: 1 | 1 |
| 40149 | RW | -contact type | 1:normally open 2:normally close | Default: 1 | 1 |
| 40150 | RW | -input delay (0.01s/unit) | 0~60000 | Default: 5 | 1 |
| 40152 | RW | Programmable input2 -input function | *Note12* | Default: 1 | 1 |

| | | | | | |
|---|---|---|---|---|---|
| 40154 | RW | -contact type | 1:NO 2:NC | Default: 1 | 1 |

| | | | | | |
|---|---|---|---|---|---|
| 40155 | RW | -input delay (0.01s/unit) | 0~60000 | Default: 5 | 1 |
| 40157 | RW | Programmable input3 -input function | *Note12* | Default: 1 | 1 |
| 40159 | RW | -contact type | 1:NO<br>2:NC | Default: 1 | 1 |
| 40160 | RW | -input delay (0.01s/unit) | 0~60000 | Default: 5 | 1 |
| 40162 | RW | Programmable input4 -input function | *Note12* | Default: 1 | 1 |
| 40164 | RW | -contact type | 1:NO<br>2:NC | Default: 1 | 1 |
| 40165 | RW | -input delay (0.01s/unit) | 0~60000 | Default: 5 | 1 |
| 40167 | RW | Programmable input5 -input function | *Note12* | Default: 1 | 1 |
| 40169 | RW | -contact type | 1:NO<br>2:NC | Default: 1 | 1 |
| 40170 | RW | -input delay (0.01s/unit) | 0~60000 | Default: 5 | 1 |
| 40232 | RW | Programmable output1 -output function | *Note 13* | Default: 1 | 1 |
| 40234 | RW | Output mode | 1:normally open<br>2:normally close | Default: 1 | 1 |
| 40235 | RW | Programmable output2 -output function | *Note 13* | Default: 1 | 1 |
| 40237 | RW | Output mode | 1:NO<br>2:NC | Default: 1 | 1 |
| 40238 | RW | Programmable output3 -output function | *Note 13* | Default: 1 | 1 |
| 40240 | RW | Output mode | 1:NO<br>2:NC | Default: 1 | 1 |
| 40241 | RW | Programmable output4 -output function | *Note 13* | Default: 1 | 1 |
| 40243 | RW | Output mode | 1:NO<br>2:NC | Default: 1 | 1 |
| 40244 | RW | Programmable output5 -output function | *Note 13* | Default: 1 | 1 |
| 40246 | RW | Output mode | 1:NO<br>2:NC | Default: 1 | 1 |
| 40247 | RW | Programmable output6 -output function | *Note 13* | Default: 1 | 1 |
| 40249 | RW | Output mode | 1:NO<br>2:NC | Default: 1 | 1 |
| 40564 | RW | Save Parameter | *Note 15* | Default: 1 | 1 |
| 40565 | RW | Position switch | 5:position I<br>2:position II<br>4:position 0 | | 1 |
| 40566 | RW | System RealTime | *Note 16* | | 7 |

*Description：Note1.*

| *Bit0* | *Bit1* | *Bit2* | *Bit3* | *Bit4* | *Bit5* | *Bit6* | *Bit7* | *Status* |
|---|---|---|---|---|---|---|---|---|
| *0* | *0* | *0* | *0* | *0* | *0* | *0* | *0* | *Normal* |
| *1* | *0* | *0* | *0* | *0* | *0* | *0* | *0* | *Missing phase* |

| | | | | | | | | |
|---|---|---|---|---|---|---|---|---|
| 0 | 1 | 0 | 0 | 0 | 0 | 0 | 0 | Over-voltage |
| 0 | 0 | 1 | 0 | 0 | 0 | 0 | 0 | Under-voltage |
| 0 | 0 | 0 | 1 | 0 | 0 | 0 | 0 | unbalanced phase |
| 0 | 0 | 0 | 0 | 1 | 0 | 0 | 0 | Over-frequency |
| 0 | 0 | 0 | 0 | 0 | 1 | 0 | 0 | Under-frequency |
| 0 | 0 | 0 | 0 | 0 | 0 | 1 | 0 | Phase N loss |

*Note2： Temperature value uses 4 bytes to show a float data, accords with IEEE-754 standard.*

*Method to realize：union { float fdata; unsigned char cdata[4]};*

*Note3：ATSC working mode: range 1-4, 1-PROG, 2-MANU, 3-AUTO, 4-TEST*

*Note4： Backlight ON time: range1-31, setting 31 is keeping activated (keep lighting)*

*Note5：Serial baud rate: range 2-6, 2-2400,3-4800,4-9600,5-19200,6-38400*

*Note6：Serial data format: range1-5，1-8N,2-8O,3-8E,4-7O,5-7E*

*Note7：Power system type: range1-4，1- 3 phase 4 wires，2-3 phase 3 wires，3-2 phase 3 wires，4-1 phase 2 wires*

*Note8：Power supply type: range 1-4，1-Mains- Mains，2- Mains -Genset，3- Genset - Mains*

*Note9：Back to main power supply: range 1-3，1- Automatic transfer not automatic recover，2- Automatic transfer automatic recover，3- mutually reserved*

*Note10：Off position: range 1-3，1-two off position，2-one off position，3-no off position*

*Note11：Phase sequence detection: range1-3， 1-L1L2L3,2-L3L2L1,3-off*

*Note12：Programmable input function：1- Inhibit,2-Forced to 0 position,3-Priority,*

*4-Remote control,5-Remote position I,6-Remote position II,7-Remote position 0,8-Test off load,9-Test on load,10-LSI*

*Note13：Programmable output function：1- Inhibit,2-ATS ready,3-SI available,*

*4-SII available,5-Alarm,6-Manu mode,7-Test mode,8-Position I,9-Position II,10-Position 0,11-Forced to 0 position,12-LSC,13-ATS Source N,14-ATS Source L,15-Strat generator,16-Universal*

*Note14：Aux Connetor feedbacks：1-three feedbacks,2-two feedbacks,3-zero feedback*

*Note15：Save Parameter:when configuration is done,write this data 1 to save the last parameter.*
*Note16: The data in order to year(2010~2200),month(1~12),date(1~31),hour(0~23),minute(0~59),second(0~59), the last one data set 1 means to update time.*

# HDGL Switch Disconnectors

Standard: IEC60947-3

## Range Presentation

HDGL is Himel range of Switch Disconnectors used in power distribution system for isolation and switching.

## Features

- For AC 50/60Hz systems
- Max. rated operating voltage: 690V
- Max. rated operating current: 3150A

## Online Content

HDGL

## Selection Code

| Range name | Type | Frame current | Pole number | Shaft | Window | Rated current |
|---|---|---|---|---|---|---|
| **HDGL** | **Z** | **160** | **3** | **J** | **K** | **100** |
| **HDGL** | **Default:**<br>Normal type<br>**Z:** Overlap type<br>**ZC:** Symmetric type | **63:** 63A<br>**100:** 100A<br>**160:** 160A<br>**250:** 250A<br>**630:** 630A<br>**1600:** 1600A<br>**3150:** 3150A | **3:** 3P<br>**4:** 4P | **Default:** no shaft<br>**J:** External operation with extended shaft 300mm | **Default:** no window<br>**K:** with observing window | **16:** 16A<br>**25:** 25A<br>**32:** 32A<br>**40:** 40A<br>**63:** 63A<br>...<br>**2000:** 2000A<br>**2500:** 2500A<br>**3150:** 3150A |

## Technical Parameters

| Switch Disconnectors | HDGL | | | | | | | |
|---|---|---|---|---|---|---|---|---|
| Utilization Category | AC-22B | | | | | | | |
| Conventional free air thermal current (A) | 16 25 32 40 63 | 80 100 | 100 125 160 | 200 250 | 315 400 | 500 630 | 800 1000 1250 1600 | 2000 2500 3150 |
| Power frequency withstand voltage (V) | 2000 | | | | | | | |
| Rated insulation voltage (V) | 800 | | | | | | | |
| Rated impulse withstand voltage Uimp | 12kV(2000m) | | | | | | | |
| Rated short-time withstand current (kA) | 2 | | 12 | | 20 | 25 | 50 | |
| Mechanical Endurance | 8000 | | | | 5000 | | 3000 | 1000 |
| Electrical Endurance | 1500 | | 200 | | | | 100 | |

Note:
- Default length of the extended shaft for external operation handle is 300mm, (500mm available on request).
- Window: no window for 16-100A, and 125A-3150A can be manufactured with window
- No auxiliary contact for 16-100A
- Maximum rated current for symmetric type double-throw switch is 1600A



LOW VOLTAGE DISTRIBUTION

HDGL Switch Disconnectors

Standard: IEC60947-3

## Accessories Selection Code

HDGL1600OF11

HDGL3150OF11

HDGLZ(C)630OF11

HDGL100J300

HDGL630J300

HDGL3150J300

HDGL3150JB300

HDGLZ630J300

| Standard Reference | Description |
|---|---|
| HDGL1600OF11 | HDGL-100~1600A Auxiliary contact 1NO1NC |
| HDGL1600OF22 | HDGL-100~1600A Auxiliary contact 2NO2NC |
| HDGL3150OF11 | HDGL-2000~3150A Auxiliary contact 1NO1NC |
| HDGL3150OF22 | HDGL-2000~3150A Auxiliary contact 2NO2NC |
| HDGLZ630OF11 | HDGLZ-100~630A Auxiliary contact 1NO1NC |
| HDGLZ630OF22 | HDGLZ-100~630A Auxiliary contact 2NO2NC |
| HDGLZ3150OF11 | HDGLZ-800~3150A Auxiliary contact 1NO1NC |
| HDGLZ3150OF22 | HDGLZ-800~3150A Auxiliary contact 2NO2NC |
| HDGLZC630OF11 | HDGLZC-100~630A Auxiliary contact 1NO1NC |
| HDGLZC630OF22 | HDGLZC-100~630A Auxiliary contact 2NO2NC |
| HDGLZC1600OF11 | HDGLZC-800~1600A Auxiliary contact 1NO1NC |
| HDGLZC1600OF22 | HDGLZC-800~1600A Auxiliary contact 2NO2NC |
| | |
| HDGL100J300 | HDGL(Z)(C) 16~100A External operation handle with 300mm shaft |
| HDGL630J300 | HDGL 100~630A External operation handle with 300mm shaft |
| HDGL3150J300 | HDGL(Z)(C) 800~3150AF External operation handle with 300mm shaft |
| HDGL3150JB300 | HDGL(Z)(C) 800~3150A External operation handle with 300mm shaft B type |
| HDGLZ630J300 | HDGLZ(C) 100~630A External operation handle with 300mm shaft |

# HDGL Switch Disconnectors

Standard: IEC60947-3

## HDGL(Z)(C) Assembly Demonstration

**HDGL assembly demonstration**

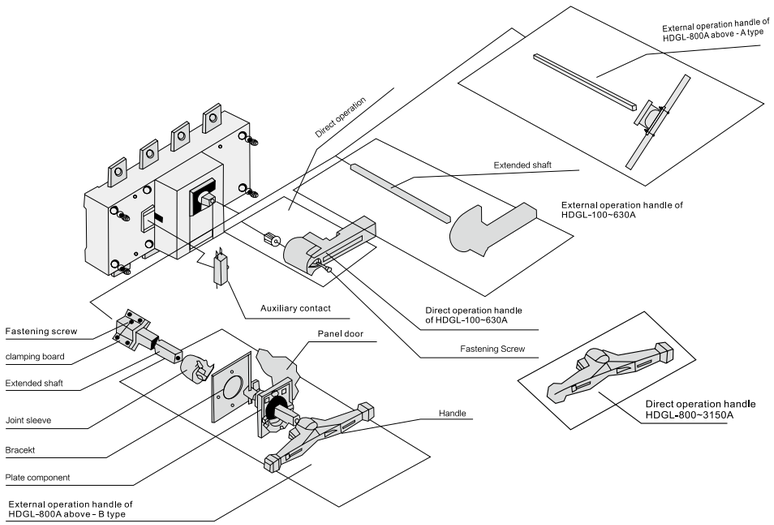


**HDGLZ assembly demonstration**

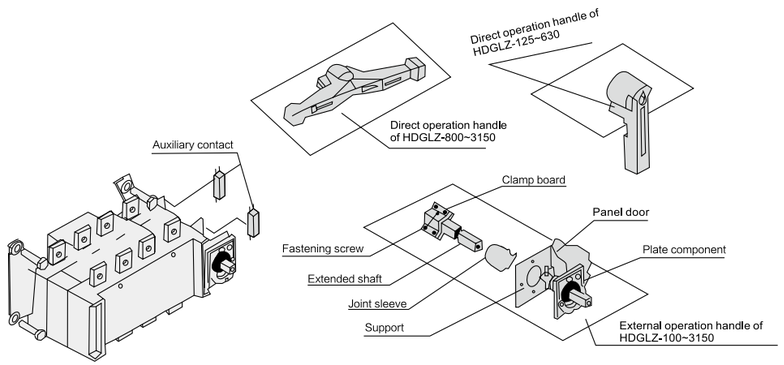






# HDGL Switch Disconnectors

Standard: IEC60947-3

**HDGLZC assembly demonstration**

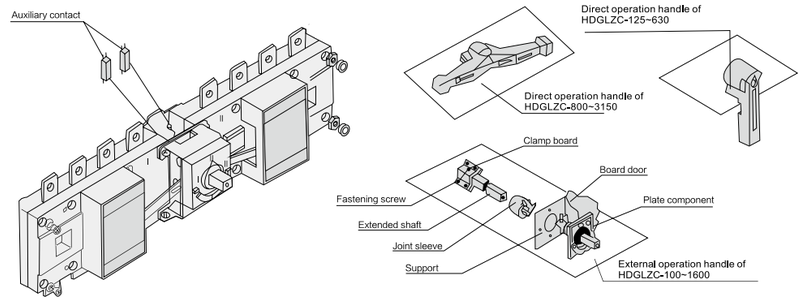


## Overall and Installation Dimensions

**HDGL-16~63/3(4) and HDGL-80~100/3(4) (100A here is under 100AF)**

HDGL-16~63/3(4)

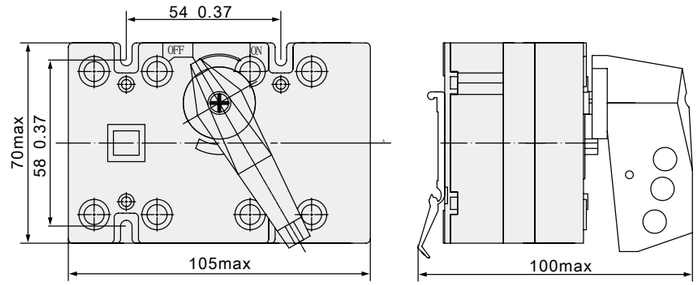


HDGL-80~100/3(4)

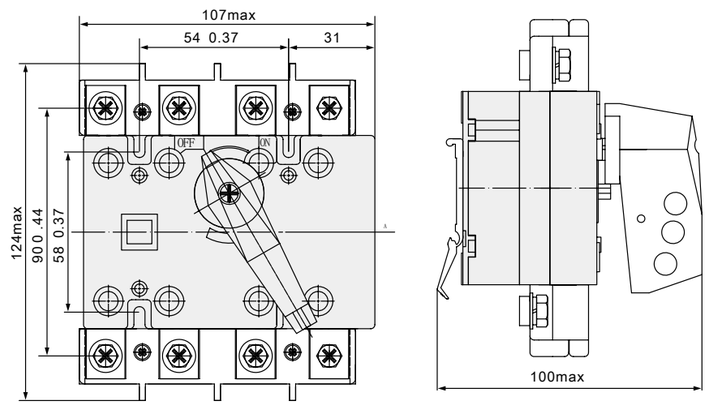


# HDGL Switch Disconnectors

Standard: IEC60947-3

## Overall and Installation Dimensions

**HDGL-100~630A(100A here is under 160AF.)**

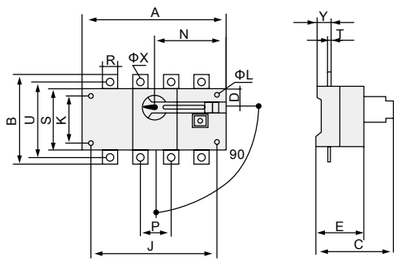


HDGL-100~630A Direct operation

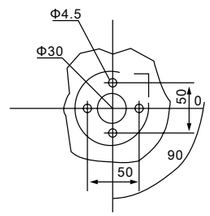


Mounting dimension of handle base outside cabinet

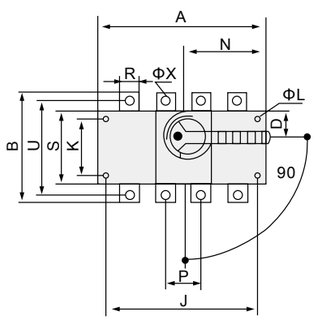


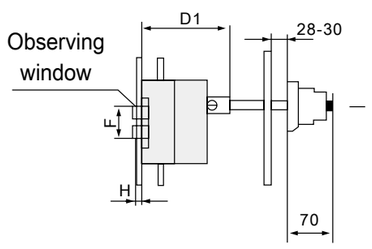


HDGL-100~630A/JK External operation

| Specifications | Overall dimensions and mounting dimensions | | | | | | | | | | | | | | | | | | |
|---|---|---|---|---|---|---|---|---|---|---|---|---|---|---|---|---|---|---|---|
| HDGL-100~630AF | A | B | C | D | D1 | E | ΦL | J | K | N | P | R | S | T | U | ΦX | Y | F | H |
| 100A/3 (160AF) | 140 | 135 | 120 | 27 | 92 | 73 | 5.5 | 120 | 65 | 85 | 36 | 20 | 85 | 3.5 | 115 | 9 | 25 | 53 | 10 |
| 100A/4 (160AF) | 170 | 135 | 120 | 27 | 92 | 73 | 5.5 | 150 | 65 | 85 | 36 | 20 | 85 | 3.5 | 115 | 9 | 25 | 53 | 10 |
| 125A/3 | 140 | 135 | 120 | 27 | 92 | 73 | 5.5 | 120 | 65 | 85 | 36 | 20 | 85 | 3.5 | 115 | 9 | 25 | 53 | 10 |
| 125A/4 | 170 | 135 | 120 | 27 | 92 | 73 | 5.5 | 150 | 65 | 85 | 36 | 20 | 85 | 3.5 | 115 | 9 | 25 | 53 | 10 |
| 160A/3 | 140 | 135 | 120 | 27 | 92 | 73 | 5.5 | 120 | 65 | 85 | 36 | 20 | 85 | 3.5 | 115 | 9 | 25 | 53 | 10 |
| 160A/4 | 170 | 135 | 120 | 27 | 92 | 73 | 5.5 | 150 | 65 | 85 | 36 | 20 | 85 | 3.5 | 115 | 9 | 25 | 53 | 10 |
| 200A/3 | 180 | 170 | 138 | 35 | 98 | 86 | 6.5 | 160 | 90 | 115 | 50 | 25 | 110 | 3.5 | 140 | 11 | 25 | 80 | 15 |
| 200A/4 | 230 | 170 | 138 | 35 | 98 | 86 | 6.5 | 210 | 90 | 115 | 50 | 25 | 110 | 3.5 | 140 | 11 | 25 | 80 | 15 |
| 250A/3 | 180 | 170 | 138 | 35 | 98 | 86 | 6.5 | 160 | 90 | 115 | 50 | 25 | 110 | 3.5 | 140 | 11 | 25 | 80 | 15 |
| 250A/4 | 230 | 170 | 138 | 35 | 98 | 86 | 6.5 | 210 | 90 | 115 | 50 | 25 | 110 | 3.5 | 140 | 11 | 25 | 80 | 15 |
| 315A/3 | 230 | 240 | 175 | 50 | 135 | 110 | 7 | 210 | 140 | 145 | 65 | 32 | 160 | 4.5 | 206 | 11 | 37 | 104 | 20 |
| 315A/4 | 290 | 240 | 175 | 50 | 135 | 110 | 7 | 270 | 140 | 145 | 65 | 32 | 160 | 4.5 | 206 | 11 | 37 | 104 | 20 |
| 400A/3 | 230 | 240 | 175 | 50 | 135 | 110 | 7 | 210 | 140 | 145 | 65 | 32 | 160 | 4.5 | 206 | 11 | 37 | 104 | 20 |
| 400A/4 | 290 | 240 | 175 | 50 | 135 | 110 | 7 | 270 | 140 | 145 | 65 | 32 | 160 | 4.5 | 206 | 11 | 37 | 104 | 20 |
| 500A/3 | 230 | 260 | 175 | 50 | 135 | 110 | 7 | 210 | 140 | 145 | 65 | 40 | 160 | 6 | 220 | 13 | 37 | 104 | 20 |
| 500A/4 | 290 | 260 | 175 | 50 | 135 | 110 | 7 | 270 | 140 | 145 | 65 | 40 | 160 | 6 | 220 | 13 | 37 | 104 | 20 |
| 630A/3 | 230 | 260 | 175 | 50 | 135 | 110 | 7 | 210 | 140 | 145 | 65 | 40 | 160 | 6 | 220 | 13 | 37 | 104 | 20 |
| 630A/4 | 290 | 260 | 175 | 50 | 135 | 110 | 7 | 270 | 140 | 145 | 65 | 40 | 160 | 6 | 220 | 13 | 37 | 104 | 20 |





# HDGL Switch Disconnectors

Standard: IEC60947-3

## Overall and Installation Dimensions

**HDGL-800~1600**

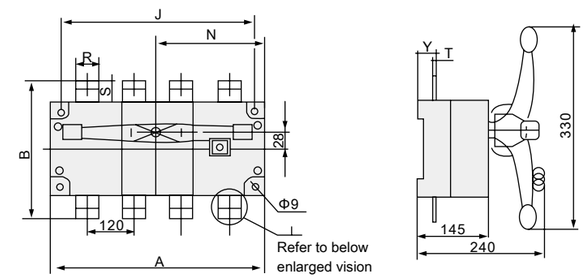


HDGL-800～1600A

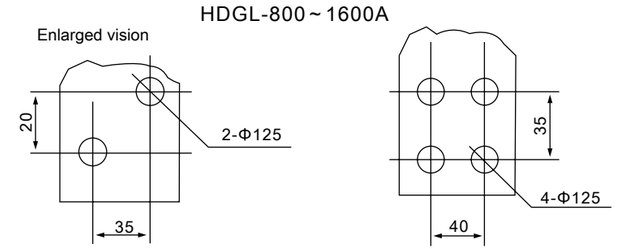


800～1000A　　1250～1600A

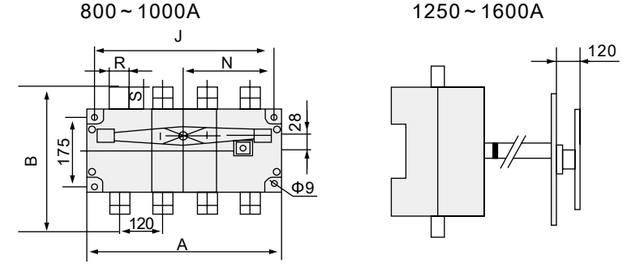


HDGL-800～1600A/J

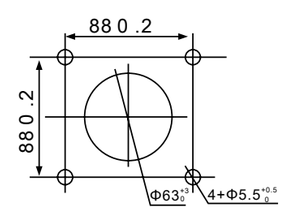


A type:mounting dimension of outside handle base

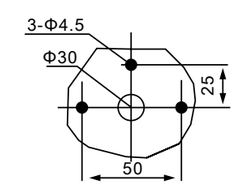


B type:Mounting dimension of outside handle base

Note: 1. A type handle, length 405; B type handle, length 330
2. Defulted A type handle,B type handle can be customized individually

# HDGL Switch Disconnectors

Standard: IEC60947-3

| Specifications | Overall dimensions and mounting dimensions | | | | | | | |
|---|---|---|---|---|---|---|---|---|
| HDGL-800A~1600A | A | B | J | N | R | S | T | Y |
| 800A~1000A/3 | 378 | 312 | 353 | 185 | 60 | 56 | 8 | 48 |
| 800A~1000A/4 | 498 | 312 | 473 | 245 | 60 | 56 | 8 | 48 |
| 1250A/3 | 378 | 360 | 353 | 185 | 80 | 78 | 8 | 48 |
| 1250A/4 | 498 | 360 | 473 | 245 | 80 | 78 | 8 | 48 |
| 1600A/3 | 378 | 360 | 353 | 185 | 80 | 78 | 10 | 49 |
| 1600A/4 | 498 | 360 | 473 | 245 | 80 | 78 | 10 | 49 |

**HDGL-2000A~3150A**

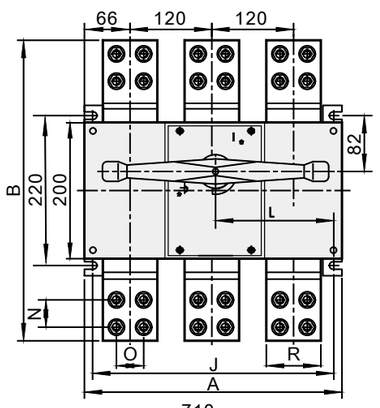


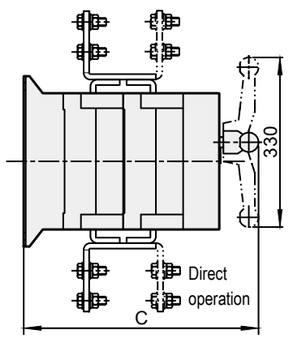


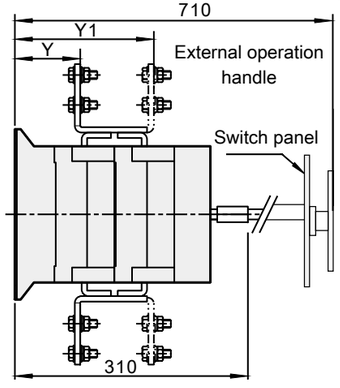


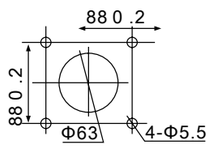


A type: mounting dimension of outside handle base

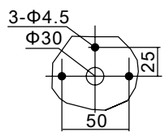


B type: mounting dimension of outside handle base

Note: 1.A type handle, length 405, B type handle, length 330
2. Defaulted A type handle, B type handle can be customized individually

Installation dimension drawing of handle panel outside cabinet

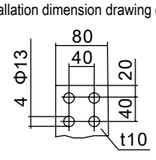


2000-2500A

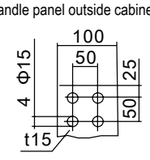


3150A





# HDGL Switch Disconnectors

Standard: IEC60947-3

| Specification current | HDGL-2000,2500,3150 Installation dimensions of switchgear and switchgear inside cabinet (mm) | | | | | | | | | |
|---|---|---|---|---|---|---|---|---|---|---|
| | A | B | C | L | J | N | O | R | Y | Y1 |
| HDGL-2000A/3 | 378 | 440 | 374 | 173.5 | 350 | 40 | 40 | 80 | 92 | 225 |
| HDGL-2500A/3 | 378 | 440 | 374 | 173.5 | 350 | 40 | 40 | 80 | 92 | 225 |
| HDGL-3150A/3 | 378 | 510 | 374 | 173.5 | 350 | 50 | 50 | 100 | 76 | 245 |
| HDGL-2000A/4 | 500 | 440 | 374 | 235 | 473 | 40 | 40 | 80 | 92 | 225 |
| HDGL-2500A/4 | 500 | 440 | 374 | 235 | 473 | 40 | 40 | 80 | 92 | 225 |
| HDGL-3150A/4 | 500 | 510 | 374 | 235 | 473 | 50 | 50 | 100 | 76 | 245 |

**HDGLZ-80~100A (100A here is under 100AF)**

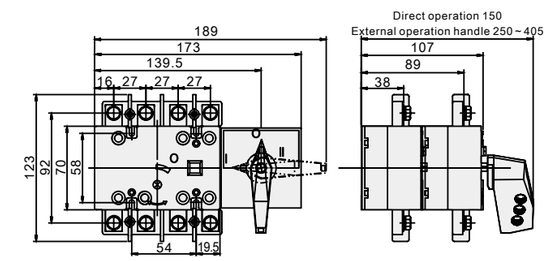


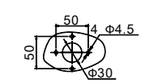


Installation dimension drawing of handle panel outside cabinet

**HDGLZ-100~1600A (100A here is under 160AF)**

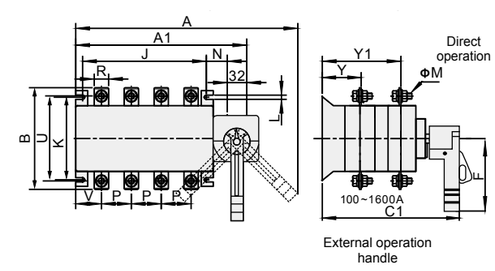


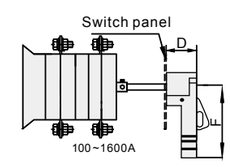


# HDGL Switch Disconnectors

Standard: IEC60947-3

| Specification current | Overall dimensions and mounting dimensions (mm) | | | | | | | | | | | | | | | | |
|---|---|---|---|---|---|---|---|---|---|---|---|---|---|---|---|---|---|
| | A | A1 | B | C1 | D | F | J | K | L | N | P | R | U | V | øM | Y | Y1 |
| 100-160A/3 | 265 | 196 | 135 | 211 | 85 | 115 | 120 | 95 | 7 | 29.5 | 36 | 20 | 115 | 29 | 8 | 55 | 122 |
| 100-160A/4 | 295 | 226 | 135 | 211 | 85 | 115 | 150 | 95 | 7 | 29.5 | 36 | 20 | 115 | 29 | 8 | 55 | 122 |
| 200-250A/3 | 310 | 235 | 170 | 240 | 85 | 115 | 160 | 115 | 8.5 | 29.5 | 50 | 25 | 142 | 37 | 10 | 65 | 148 |
| 200-250A/4 | 360 | 288 | 170 | 240 | 85 | 115 | 210 | 115 | 8.5 | 29.5 | 50 | 25 | 142 | 37 | 10 | 65 | 148 |
| 315-400A/3 | 405 | 305 | 240 | 312 | 85 | 143 | 210 | 180 | 10 | 43 | 65 | 30 | 205 | 48 | 10 | 85 | 200 |
| 315-400A/4 | 460 | 365 | 240 | 312 | 85 | 143 | 275 | 180 | 10 | 43 | 65 | 30 | 205 | 48 | 10 | 85 | 200 |
| 500-630A/3 | 405 | 305 | 260 | 312 | 85 | 143 | 210 | 180 | 10 | 43 | 65 | 40 | 220 | 48 | 12 | 86 | 201 |
| 500-630A/4 | 460 | 365 | 260 | 312 | 85 | 143 | 275 | 180 | 10 | 43 | 65 | 40 | 220 | 48 | 12 | 86 | 201 |
| 800-1000A/3 | 585 | 480 | 320 | 410 | 105 | 165 | 350 | 220 | 11 | 50 | 120 | 60 | 246 | 73 | 10 | 115 | 260 |
| 800-1000A/4 | 715 | 600 | 320 | 410 | 105 | 165 | 473 | 220 | 11 | 50 | 120 | 60 | 246 | 73 | 10 | 115 | 260 |
| 1250A/3 | 585 | 480 | 340 | 410 | 105 | 165 | 350 | 220 | 11 | 50 | 120 | 80 | 246 | 73 | 12 | 115 | 260 |
| 1250A/4 | 715 | 600 | 340 | 410 | 105 | 165 | 473 | 220 | 11 | 50 | 120 | 80 | 246 | 73 | 12 | 115 | 260 |
| 1600A/3 | 585 | 480 | 340 | 410 | 105 | 165 | 350 | 220 | 11 | 50 | 120 | 80 | 246 | 73 | 12 | 116 | 262 |
| 1600A/4 | 715 | 600 | 340 | 410 | 105 | 165 | 473 | 220 | 11 | 50 | 120 | 80 | 246 | 73 | 12 | 116 | 262 |





# HDGL Switch Disconnectors

Standard: IEC60947-3

## Overall and Installation Dimensions

**HDGLZ-2000~3150A**

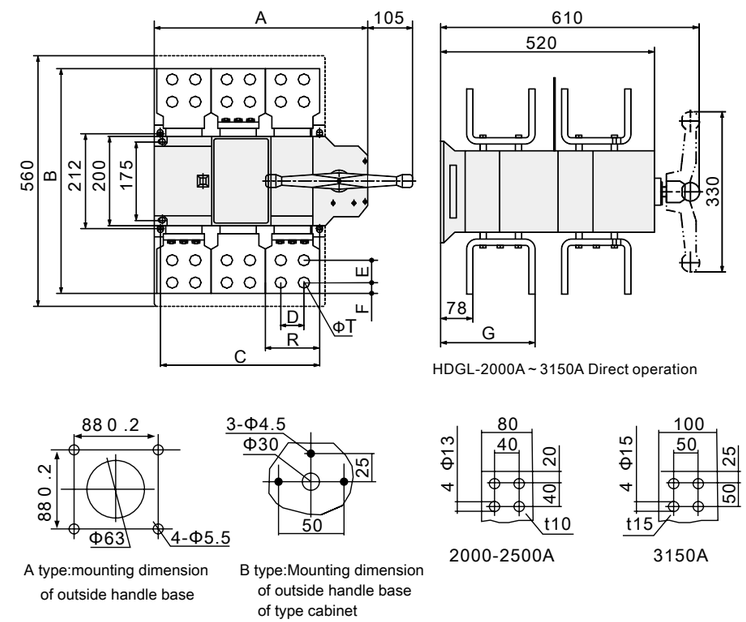


Note: 1. A type handle, length 405, B type handle,length 330;
2. Defulted A type handle, B type handle can be customized individually

| Specification current | Overall dimensions and mounting dimensions (mm) | | | | | | | | |
|---|---|---|---|---|---|---|---|---|---|
| | A | B | C | D | E | F | G | T | R |
| 2000A/3 | 479 | 418 | 353 | 40 | 40 | 20 | 220 | 10 | 80 |
| 2000A/4 | 598 | 418 | 473 | 40 | 40 | 20 | 220 | 10 | 80 |
| 2500A/3 | 479 | 418 | 353 | 40 | 40 | 20 | 220 | 10 | 80 |
| 2500A/4 | 598 | 418 | 473 | 40 | 40 | 20 | 220 | 10 | 80 |
| 3150A/3 | 479 | 492 | 353 | 50 | 50 | 25 | 320 | 15 | 100 |
| 3150A/4 | 598 | 492 | 473 | 50 | 50 | 25 | 320 | 15 | 100 |

# HDGL Switch Disconnectors

Standard: IEC60947-3

**HDGLZC-16~100A (100A here is under 100AF)**

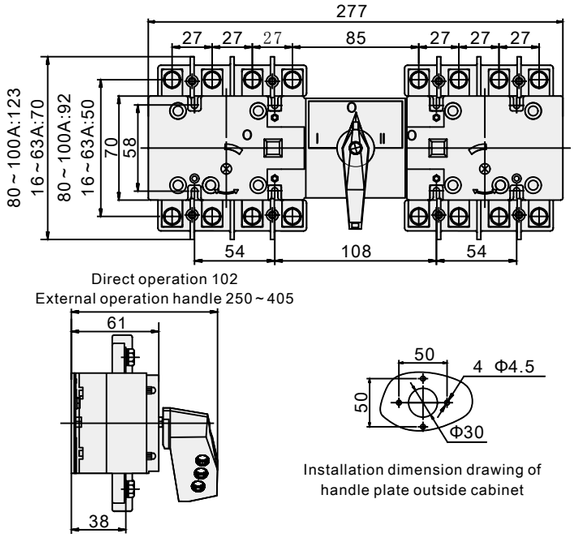


**HDGLZC-100~1600A (100A here is under 160AF)**

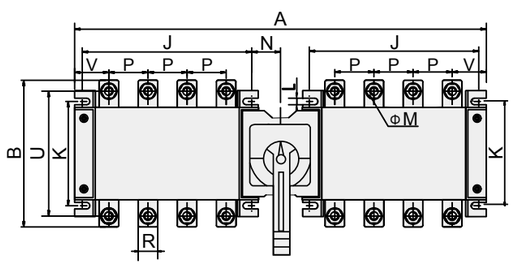


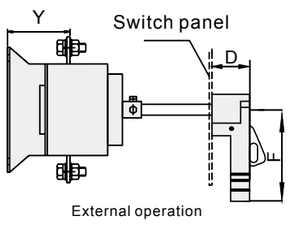






# HDGL Switch Disconnectors

Standard: IEC60947-3

## Overall and Installation Dimensions

| Specification current | Overall dimensions and mounting dimensions (mm) | | | | | | | | | | | | | | |
|---|---|---|---|---|---|---|---|---|---|---|---|---|---|---|---|
| | A | B | C | D | F | J | K | L | N | P | R | U | V | øM | Y |
| 100-160A/3 | 320 | 135.5 | 144 | 85 | 115 | 120 | 95 | 7 | 29.5 | 36 | 20 | 115 | 29 | 8 | 55 |
| 100-160A/4 | 380 | 135.5 | 144 | 85 | 115 | 150 | 95 | 7 | 29.5 | 36 | 20 | 115 | 29 | 8 | 55 |
| 200-250A/3 | 400 | 172 | 158 | 85 | 115 | 160 | 115 | 8.5 | 29.5 | 50 | 25 | 142 | 37 | 10 | 65 |
| 200-250A/4 | 503 | 172 | 158 | 85 | 115 | 210 | 115 | 8.5 | 29.5 | 50 | 25 | 142 | 37 | 10 | 65 |
| 315-400A/3 | 545 | 240 | 195 | 85 | 143 | 210 | 180 | 10 | 43 | 65 | 30 | 205 | 48 | 10 | 85 |
| 315-400A/4 | 660 | 240 | 195 | 85 | 143 | 275 | 180 | 10 | 43 | 65 | 30 | 205 | 48 | 10 | 85 |
| 500-630A/3 | 545 | 260 | 195 | 85 | 143 | 210 | 180 | 10 | 43 | 65 | 40 | 220 | 48 | 12 | 86 |
| 500-630A/4 | 660 | 260 | 195 | 85 | 143 | 275 | 180 | 10 | 43 | 65 | 40 | 220 | 48 | 12 | 86 |
| 800-1000A/3 | 840 | 320 | 258 | 105 | 165 | 350 | 220 | 11 | 50 | 120 | 60 | / | 73 | 10 | 115 |
| 800-1000A/4 | 1080 | 320 | 258 | 105 | 165 | 473 | 220 | 11 | 50 | 120 | 60 | / | 73 | 10 | 115 |
| 1250A/3 | 840 | 340 | 258 | 105 | 165 | 350 | 220 | 11 | 50 | 120 | 80 | / | 73 | 12 | 115 |
| 1250A/4 | 1080 | 340 | 258 | 105 | 165 | 473 | 220 | 11 | 50 | 120 | 80 | / | 73 | 12 | 115 |
| 1600A/3 | 840 | 340 | 258 | 105 | 165 | 350 | 220 | 11 | 50 | 120 | 80 | / | 73 | 12 | 116 |
| 1600A/4 | 1080 | 340 | 258 | 105 | 165 | 473 | 220 | 11 | 50 | 120 | 80 | / | 73 | 12 | 116 |

Scan me



**Himel**
www.himel.com

**Sep 2020**